BioOne COMPLETE

The Role of Ecological and Economic Factors in the Management of a Spatially Structured Moose Alces alces Population

Authors: Nilsen, Erlend B., Skonhoft, Anders, Mysterud, Atle, Milner, Jos M., Solberg, Erling J., et al.

Source: Wildlife Biology, 15(1) : 10-23

Published By: Nordic Board for Wildlife Research

URL: https://doi.org/10.2981/06-084

BioOne Complete (complete.BioOne.org) is a full-text database of 200 subscribed and open-access titles in the biological, ecological, and environmental sciences published by nonprofit societies, associations, museums, institutions, and presses.

Your use of this PDF, the BioOne Complete website, and all posted and associated content indicates your acceptance of BioOne's Terms of Use, available at www.bioone.org/terms-of-use.

Usage of BioOne Complete content is strictly limited to personal, educational, and non - commercial use. Commercial inquiries or rights and permissions requests should be directed to the individual publisher as copyright holder.

BioOne sees sustainable scholarly publishing as an inherently collaborative enterprise connecting authors, nonprofit publishers, academic institutions, research libraries, and research funders in the common goal of maximizing access to critical research.

Downloaded From: https://bioone.org/journals/Wildlife-Biology on 18 Apr 2024
Terms of Use: https://bioone.org/terms-of-use

Wildl. Biol. 15: 10-23 (2009)
DOI: 10.2981/06-084
© Wildlife Biology, NKV
www.wildlifebiology.com

Current management

The role of ecological and economic factors in the management of a spatially structured moose *Alces alces* population

Erlend B. Nilsen, Anders Skonhoft, Atle Mysterud, Jos M. Milner, Erling J. Solberg, Harry P. Andreassen & Nils Chr. Stenseth

We present a bioeconomic model for moose *Alces alces* management in Norway, where two sub-populations of moose are subject to different site-specific mortality rates caused by the spatial distribution of territorial wolf *Canis lupus* packs, and are coupled by the seasonal migration of moose. The costs and benefits of moose are asymmetrically distributed in space, since they congregate in the wolf territory during winter where most browsing damage occurs. Using a class-structured matrix population model as the basis for bioeconomic analysis, we investigated how the optimal moose management differed between a unified (i.e. maximising overall profit) and a non-unified (i.e. profit maximised at the level of individual landowners) management scheme. Within the unified management scheme, the combined marginal costs and benefits decide the optimal off-take rate, and the relative hunting value and damage costs decide the relative allocation of the harvest between the two sub-populations. In the non-unified management scheme, harvesting takes place up to the point where the private marginal hunting value equals the private marginal browsing cost, while the relative hunting value and damage costs do not influence the optimal management. As the browsing damage that occurs inside the wolf territory is not taken into account in the costs of the area outside the territory within the non-unified solution, optimal moose population size will be higher for the outer area than under the unified solution. This results in an overall economic loss, which increases with increasing migration rates. Whenever the boundaries of political or management units do not follow those of ecological processes, ignoring the spatial resolution of the ecological process will result in sub-optimal management of a renewable resource.

Key words: Alces alces, bioeconomics, Canis lupus, harvesting, migration, moose, sustainable development, wolf

Erlend B. Nilsen & Jos M. Milner, Hedmark University College, Department of Forestry and Wildlife Management, N-2480 Koppang, Norway and Centre for Ecological and Evolutionary Synthesis (CEES), Department of Biology, University of Oslo, P.O. Box 1066 Blindern, N-0316 Oslo, Norway - e-mail addresses: erlend.nilsen@nina.no (Erlend B. Nilsen); jos.milner@hihm.no (Jos M. Milner)*
Harry P. Andreassen, Hedmark University College, Department of Forestry and Wildlife Management, N-2480 Koppang, Norway - e-mail: harry.andreassen@hihm.no
Atle Mysterud & Nils Chr. Stenseth, Centre for Ecological and Evolutionary Synthesis (CEES), Department of Biology, University of Oslo, P.O. Box 1066 Blindern, N-0316 Oslo, Norway - e-mail addresses: atle.mysterud@bio.uio.no (Atle Mysterud); n.c.stenseth@bio.uio.no (Nils Chr. Stenseth)
Anders Skonhoft, Department of Economics, Norwegian University Science and Technology, Dragvoll, N-7491 Trondheim, Norway - e-mail: anders.skonhoft@svt.ntnu.no
Erling J. Solberg, Norwegian Institute for Nature Research, NO-7485 Trondheim, Norway - e-mail: erling.solberg@nina.no

**Present address: Norwegian Institute for Nature Research, NO-7485 Trondheim, Norway*

Corresponding author: Erlend B. Nilsen

Received 26 October 2006, accepted 29 July 2008

Associate Editor: Richard Stedman

Downloaded From: https://bioone.org/journals/Wildlife-Biology on 18 Apr 2024
Terms of Use: https://bioone.org/terms-of-use

A large amount of literature exists on how to optimise the yield from exploited populations under different assumptions about the stochastic and deterministic patterns that shape the population dynamics (e.g. Clark 1990, Lande et al. 2003). However, determining acceptable harvesting policies remains one of the most challenging and controversial issues related to the management of renewable resources. One reason for this is that there is often a mismatch between the spatial scale of the different management units (e.g. protected areas and hunting areas, or land under different ownership) and the spatial scale at which population processes operate. So far, the fishery sciences have been most influential in increasing our understanding of the importance of space in management schemes, e.g. by showing the interdependency between the population processes in protected and exploited areas supporting the same interbreeding population (see discussion in Kritzer & Sale 2004). By contrast, in terrestrial systems very few studies have incorporated spatial aspects when designing management plans although several recent studies have demonstrated the need for this (Milner-Gulland et al. 2000, Salas & Kim 2002, Skonhoft et al. 2002).

From an ecological point of view, incorporating space into harvesting theory is important for at least two reasons: 1) if there is spatial variation in demographic rates (structure), site-specific harvesting rates could increase the long term yield and reduce the risk of local extinction due to overharvesting. Furthermore, 2) if the sub-populations are linked by migration or dispersal (coupling), management actions taking place in one patch will generally have an effect on the population processes in the other patch, and *vice versa*. As exploiting wildlife resources often generates important income in rural communities (Milner-Gulland & Bennett 2003, Storaas et al. 2001), a sound understanding of the spatial structure underlying the population dynamics becomes even more important. In most European countries, the landowners hold the right to hunt and get the proceeds from the harvest (Gill 1990). There will often be interdependency between the different landowners, and the optimal management will depend on the spatial resolution of the management units compared to the population processes. For instance, Clutton-Brock et al. (2002) showed that the optimal management of red deer *Cervus elaphus* at the individual landowner level was dependent on the management strategies on neighbouring estates, due to sex- and density-dependent dispersal. Furthermore, it has been shown that if managers aim to maximise the gross yield in a unified manner, the total revenue will typically be higher than if local landowners follow only their own narrow self-interest as externalities are not taken into account (Skonhoft et al. 2002).

Here, we present a bioeconomic model for moose *Alces alces* management in Norway, where two moose sub-populations experiencing two different site-specific mortality rates caused by the spatial distribution of wolves *Canis lupus*, are coupled by the seasonal migration of some individuals. However, as the wolf territory is located in a typical moose wintering area, moose from the surrounding areas will migrate into the wolf territory during winter, and move out again at the end of winter. Assuming that the wolf kill rates (moose killed/wolf/year) are relatively constant over a range of prey densities (Eberhardt 1997, Hayes & Harestad 2000), this means that the predation pressure on the resident moose population inside the territory will be relaxed during winter as new individuals from the surrounding area enter the wolf territory and become susceptible as prey. In such a situation, the dynamics of the moose population inside the wolf territory will be linked to the dynamics of the surrounding moose populations. Moose also represent a cost for landowners due to browsing damage on economically important young pine trees *Pinus sylvestris* (Hörnberg 2001). As the damage primarily occurs during winter and since the moose population is seasonally migratory, some landowners outside the wintering areas could have the benefit of receiving the income from exploiting a large moose population without any costs, while other landowners could experience considerable economic losses due to browsing damage but without the benefits associated with hunting during autumn.

Building on available demographic data from Scandinavian moose populations (see Nilsen et al. 2005), we analyse the outcome of different management strategies in this system. After having explored the ecological properties of our population model, we use this model as the basis for bioeconomic analyses. First, we study the optimal management within a unified management scheme, where the goal is to optimise the overall profit (i.e. the total harvesting income minus the total browsing damage costs) in biological equilibrium. We then compare this scheme with the non-unified management scheme, where the landowners try to maximise their own profit, and there is a strategic interaction among

Downloaded From: https://bioone.org/journals/Wildlife-Biology on 18 Apr 2024
Terms of Use: https://bioone.org/terms-of-use

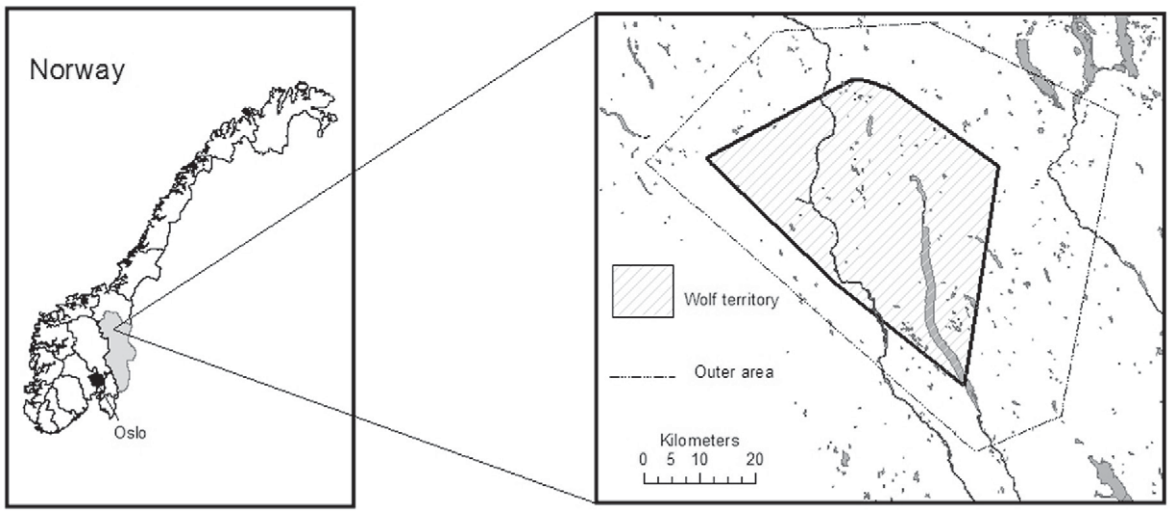

Figure 1. The study area Stor-Elvdal in southeastern Norway. The right part illustrates the wolf territory with the surrounding outer area. Main lakes and rivers are indicated on the map.

them. We illustrate the general solutions with numerical results from our study system.

Material and methods

Empirical system

We use the Koppang area in SE Norway (~ 61°N and 11°E, Fig. 1) and its wolf-moose ecological system as an empirical platform (Nilsen et al. 2005). The area is dominated by boreal coniferous forest, with Scots pine *Pinus sylvestris*, Norway spruce *Picea abies* and birch *Betula pubescens* as the dominant tree species. The moose is the most abundant cervid in the area, although local populations of roe deer *Capreolus capreolus* and red deer are present at low densities. In 1997, a wolf pack settled in the area (the 'Koppang pack'), and the demography of the wolves, as well as their interplay with the moose, has been studied since (Gundersen 2003).

The moose is a large ungulate with a northern circumpolar distribution (Franzmann & Schwartz 1998), and a mean slaughter weight (about 50% of live body weight, Wallin et al. 1996) in Norway of ca 240 kg for adult males and ca 180 kg for adult females (Nilsen & Solberg 2006). In Norway, the total annual moose harvest is currently about 35,000-40,000 individuals, with a meat harvest value estimated at US $70-90 millions (Storaas et al. 2001). Harvesting rates are decided by the municipality wildlife management board after suggestions from the landowners, and there is currently considerable interest among landowner organisations to find the optimal balance between moose harvesting and timber production (Wam et al. 2005). As a consequence, collaboration over larger areas (spanning the spatial scale of the moose population) is becoming more common, although conflicts of interest between landowners having summering and wintering areas are still widespread. The non-harvest mortality is generally low (Stubsjøen et al. 2000) due to a lack of large predators and the heavy hunting pressure leading to relatively few old individuals. However, in areas where the wolf has re-established, natural mortality rates may be considerably higher (Gundersen 2003, Sand et al. 2005) to the extent that they are as high or higher than harvesting mortality for calves and cows (Gundersen 2003). The migration patterns in our study population are fairly well understood (Gundersen 2003), with annual variation in timing and magnitude driven by climate (mainly snow conditions).

In Scandinavia, the current wolf population numbers about 136-169 individuals (status winter 2006/2007; Wabakken et al. 2007), with the packs patchily distributed like small islands throughout southern Scandinavia (Wabakken et al. 2001). Consequently, the effect of wolf predation on the moose population is very localised (Milner et al. 2005, Nilsen et al. 2005). Throughout the study of the Koppang moose-wolf system (1997-2003), the number of wolves in the Koppang pack fluctuated between 2 and 11 individuals, without following even the crudest measures of moose density (Gundersen

Downloaded From: https://bioone.org/journals/Wildlife-Biology on 18 Apr 2024
Terms of Use: https://bioone.org/terms-of-use

2003). Pack size seems to be much more influenced by social factors, such as dispersal and removal of alpha individuals. Consequently, in our model, we did not allow the wolf to show a numerical response to changing moose densities, but rather explored the effects of different predation levels, representing different pack sizes and snow conditions (Post et al. 1999) and uncertainty in methodology used to estimate kill rates (Sand et al. 2005).

Moose often cause economic loss for landowners due to browsing on commercially important tree species, in particular Scots pine (Hörnberg 2001, Ball & Dahlgren 2002, Gundersen et al. 2004). Although landscape and forest stand characteristics complicate the picture (Ball & Dahlgren 2002, Edenius et al. 2002), damage tends to be most pronounced in typical moose wintering areas. Operational targets regarding forest species composition and stand density are often lacking, and thus quantification of the actual damage is uncertain. Indeed, very few studies have been successful in quantifying the actual economic loss caused by moose browsing (Reimoser et al. 1999). Acknowledging that the actual picture is very complex, we assume here that the damage cost is related to the moose density during winter, without explicitly taking discounting due to the possible time lag between browsing and the occurrence of damage into account (see also Skonhoft & Olaussen 2005).

The ecological model

We use a matrix population model for the moose population to analyse the outcome of different management strategies. Specifically, our population model describes the dynamics of two moose sub-populations, inhabiting the area inside (hereafter the 'inner' area) and outside (hereafter the 'outer' area) the Koppang wolf territory, respectively. We assume both areas to be ca 1,000 km^2 (see also Nilsen et al. 2005), although the size of the outer area is in reality uncertain. The inner area sub-population is non-migratory, staying inside the territory throughout the year (Gundersen 2003). However, a fixed proportion (M) of the outer area sub-population migrates into the wolf territory in December-January and out again in March-April. For our study area, the migration rate for the outer area is largely unknown, although previous studies have suggested that ca 38% of the winter population in the inner area migrates out of the area in the spring (Gundersen 2003). For this reason, we explored a wide range of migration rates in our numerical simulations. We divide the year into three seasons: summer, autumn and winter, with predation restricted to the summer and winter seasons, and harvest mortality as the only mortality factor during autumn. This simplification is justified by the fact that most of the harvesting takes place in only about one month in most areas in Norway.

Ungulate populations are strongly structured by sex and age (Gaillard et al. 1998). However, as groups of age-classes tend to have quite similar demographic rates (e.g. Ericsson & Wallin 2001), the dynamics can often be described by pooling age classes with similar demographic rates together rather than by fully age-classified matrix population models (Caswell 2001). Here we use a age-classified model with six classes (juvenile females, juvenile males, yearling females, yearling males, adult females and adult males) for each of the two sub-populations. Although moose often show senescence in both survival (Ericsson & Wallin 2001) and reproduction (Ericsson et al. 2001), high harvesting pressure results in very few individuals becoming old enough for senescence to become an issue in our study population (Solberg et al. 2000). To account for the different ecological processes occurring during different seasons, we introduce auxiliary variables, representing the season. $N_{i,t}^{spring}$, $N_{i,t}^{autumn}$, $N_{i,t}^{winter}$ are thus the population size (i = inner, outer) at time t in the spring, autumn and winter, respectively, where the migratory proportion of the outer area population is included in the outer area population size also in winter. $n_{\gamma,i,t}^{s}$ is used to denote the number of individuals of a given class, where subscript γ represents the class (e.g. juvenile females), and superscript s denotes season (e.g. spring) in year t. The population model (with survival probabilities and fecundities outlined below) is illustrated in Figure 2.

Demographic rates

To parameterise the model, we use parameters from detailed studies of Scandinavian moose populations (*cf.* Nilsen et al. 2005). So far, there is no evidence of density dependence in survival (Ericsson 1999, Stubsjøen et al. 2000) within the range of moose densities in Scandinavia. Although Eberhardt (2002) noted that juvenile survival should be the first demographic rate to be affected by density, Gaillard et al. (2000) argued that for large ungulates (> 50 kg), fecundity of primiparous females tends to be the first trait affected. Indeed, fecundity in moose has been shown to be affected by population density

Downloaded From: https://bioone.org/journals/Wildlife-Biology on 18 Apr 2024
Terms of Use: https://bioone.org/terms-of-use

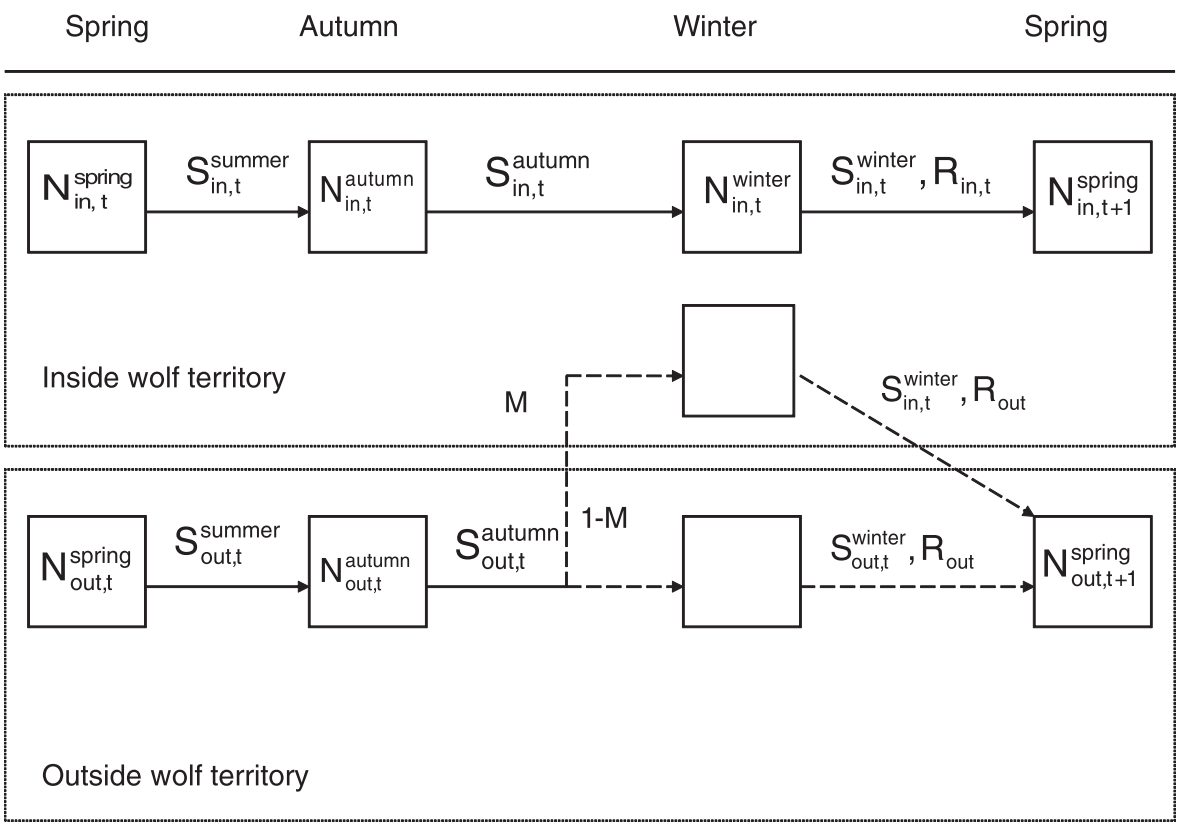

Figure 2. A schematic illustration of the population model. The top panel represents the sub-population inside the wolf territory ('inner'), whereas the bottom panel represents the sub-population outside the wolf territory ('outer'). In winter, a proportion (M) of the outside population migrates into the wolf territory, consequently experiencing the same winter mortality scheme as the inside population. At the end of the winter, they migrate out of the wolf territory again. For description of the demographic rates in the model, see Table 1.

within the range of densities observed in Scandinavia (Sand et al. 1996). In our population model, only reproduction is density dependent.

We assume that the females give birth for the first time as 3-year-olds (Ericsson et al. 2001), in early June. Consequently, only the adult class will contribute to the reproduction in our model. Although the shape of the density dependence in reproduction in moose is poorly understood, empirical data suggest that the effect is rather moderate at low densities, but becomes quite strong once reaching a threshold (see arguments in Fowler 1987). To account for this, we use a density-dependent function modified after Maynard Smith & Slatkin (1973) (i.e. a sigmoidal curve with an increasing degree of density dependence at high densities) where $R_{i,t}$ is the site-specific fecundity rate (i = inner, outer) at time t with r as the maximum specific rate, i.e. when no crowding-effects are acting:

$$R_{i,t} = \frac{r}{1 + (N^{autumn}_{i,t}/K)^b} \quad (1),$$

where K is the inflection point and b is the slope parameter of the function. For parameter values, see Table 1.

The functional response of the wolf to increasing moose densities has been a controversial topic (Eberhardt 1997, Marshal & Boutin 1999). However, this debate has mainly focused on the response at low moose densities, whereas at medium to high moose densities, as occur in our study area, kill rates seem to be relatively unaffected by moose density (see e.g. Eberhardt et al. 2003). Although some recent studies have suggested that wolf kill rates are best modelled as a function of predator and prey densities (or the ratio of prey to predators; Vucetich

Downloaded From: https://bioone.org/journals/Wildlife-Biology on 18 Apr 2024
Terms of Use: https://bioone.org/terms-of-use

Table 1. An overview of parameter values used in the class-structured matrix population model for a migratory moose population in southeastern Norway, and the parameter values for the bioeconomical model.

Parameter	Significance of term	Symbol	Value
Reproduction[1]	Intercept in the reproduction function	r	1.35
	Population size at which $R_{i,t}$ is half of r	K	1500
	Exponent (slope parameter)	b	2
Mortality	Adult and yearling summer mortality[2]	$Q^{summer}_{y=yearl,\ adult}$	0.02
	Adult and yearling winter mortality[2]	$Q^{winter}_{y=yearl,\ adult}$	0.02
	Juvenile summer mortality rate[2]	$Q^{summer}_{y=juv}$	0.1
	Juvenile winter mortality rate[2]	$Q^{winter}_{y=juv}$	0.05
Predation	Half saturation density	h	100
	Maximum number of moose killed/season[3]	α	50
	Proportion of calves in the wolf kills[3]	κ_{juv}	0.6
	Proportion of yearlings in the wolf kills[3]	κ_{yearl}	0.3
	Proportion of adult females in the wolf kills[3]	$\kappa_{ad\ fem}$	0.1
Migration rate	Migratory fraction of outer area population	M	0.0-1.0
Economical factors	Harvesting value for one moose[4]	p_i	10 000 (5000) NOK
	Browsing cost for one moose	a_i	150 (1500) NOK

1) See Nilsen et al. 2005 for a discussion of the parameters.
2) Numerical values approximated from Stubsjøen et al. 2000.
3) Numerical values based on Gundersen 2003 (see also Sand et al. 2006).
4) Values from Storaas et al. 2001. Alternative values in parentheses.

et al. 2002), we used a purely prey dependent functional response as we did not model the wolf population explicitly. Consequently, any change in prey density in our model will also result in a change in the predator-prey ratio. Thus, we chose to model the relationship between prey density and wolf kill rates as a type II functional response (e.g. Marshal & Boutin 1999), given by the disc equation $k = \frac{\alpha n}{h+n}$, where α is the asymptotic kill rate and h is the prey density at which the kill rate is half of α. Thus, if α is the maximum total number of moose killed by wolves in one season (winter, summer) and κ_γ is the proportion of a given class in the total wolf kills, the seasonal predation rate for the inner area ($P(\cdot)$) is then expressed as

$$P^s_{\gamma,t} = \frac{\alpha\kappa_\gamma(n^s_{\gamma,in,t})(n^s_{\gamma,out,t}M)/h + (n^s_{\gamma,in,t})(n^s_{\gamma,out,t}M)}{(n^s_{\gamma,in,t})(n^s_{\gamma,out,t}M)} \quad (2).$$

By using this function, only the inside population will be subject to predation during summer, whereas the migratory proportion ($N^s_{out,t}M$) of the outer sub-population will also be subject to predation during winter. In the model, we assume that calves constitute the bulk of the wolf kills (see Table 1), as they clearly represent the most important part of the wolf kills in Scandinavia, whereas no adult bulls are killed (Gundersen 2003, Sand et al. 2005). We assume that an equal number of animals are killed by wolves during the winter and summer seasons.

Seasonal non-predation mortality rates derived from Stubsjøen et al. (2000) were used to parameterise the model (see Table 1). We assume that the non-predation mortality rates ($Q(\cdot)$) are similar between the two sub-populations. The seasonal survival rates for each class ($S(\cdot)$) are given as

$$S^s_{\gamma,i,t} = (1\text{-}P^s_{\gamma,t})(1\text{-}Q^s_{\gamma,t}) \text{ when } i = \text{inner, and}$$
$$S^s_{\gamma,i,t} = (1\text{-}Q^s_{\gamma,t}) \text{ when } i = \text{outer} \quad (3).$$

Note that the migratory part of the outer population is subject to similar survival rates as the inner population during winter (see Fig. 2). Parameter values are given in Table 1.

Dynamics of the population model without harvesting

Exploring the model within the parameter range (given in Table 1), but without harvesting, resulted in a stable equilibrium population size approached asymptotically. The equilibrium population size for the inner area sub-population was affected by the predation pressure and, to a lesser extent, by the migration rate (Fig. 3a). The outer area sub-population size was also affected by both parameters, but the effect of predation became stronger as the migration rate increased (see Fig. 3b). Although the stable equilibrium densities seem high compared to reported Scandinavian moose densities (ca 5 moose/km^2 from the model output, compared to on average ca 1.0 moose/km^2 for Scandinavia, see Hörnberg

Downloaded From: https://bioone.org/journals/Wildlife-Biology on 18 Apr 2024
Terms of Use: https://bioone.org/terms-of-use

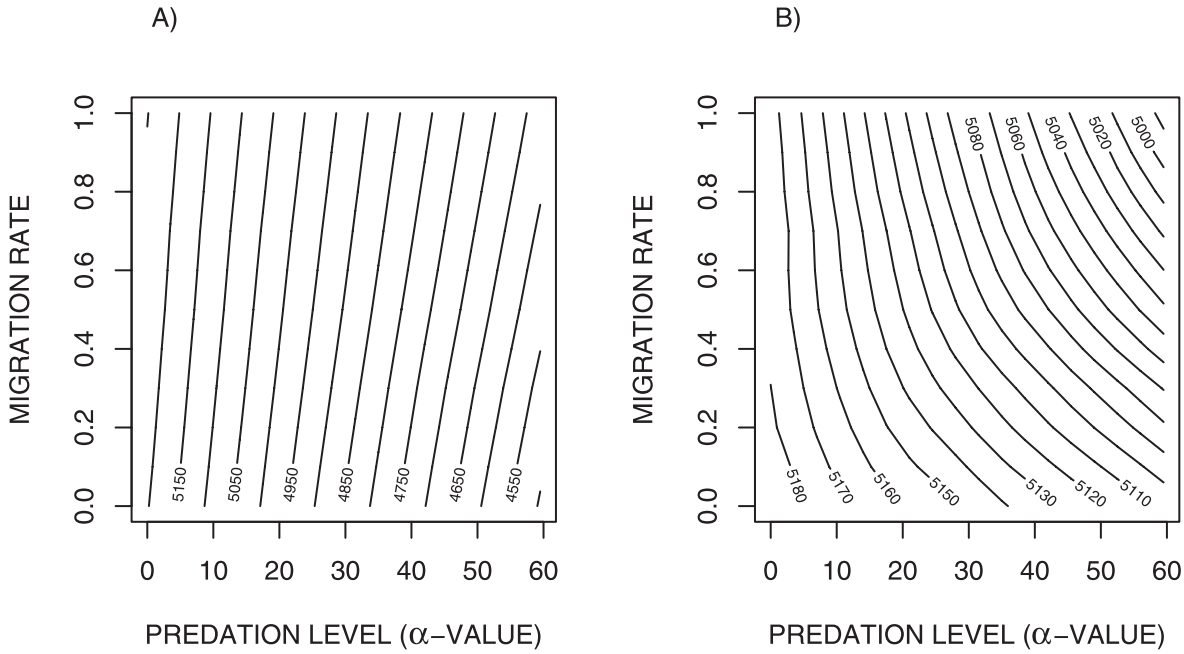

Figure 3. The effects of migration rate (M) and predation (α) on the equilibrium moose population size at the end of the summer for the inner (A) and outer (B) sub-populations, respectively. Note that these results are obtained for a scenario without harvesting.

2001, Lavsund et al. 2003), that is because the latter are heavily harvested populations. The equilibrium densities generated by our model in situations with harvesting are within the range observed in Scandinavia (Fig. 4). We are thus confident that our model represents the moose population dynamics fairly well.

Dynamics of the ecological model with harvesting

In our model, the harvest is restricted to a short period in the autumn (late September to late October). Consequently, the harvest takes place before migration. Here we are not interested in the effects of selective harvesting, so in the interests of simplicity we assume that the same fraction, h_i, (i = inner, outer) is harvested from all the classes. Compared to the population model without harvesting, the survival probabilities during autumn are then modified from 1 to ($1-h_i$).

When subject to harvesting, the sub-populations always displayed stable dynamics. The equilibrium population sizes (being functions of the fixed harvesting rates) are denoted as $N_{in}^{autumn} = F(h_{in}, h_{out})$ and $N_{out}^{autumn} = G(h_{in}, h_{out})$, where F and G represent the functional forms, and N_i is the population size (i = inner, outer) just before harvesting. Harvesting in the outer area had a negative effect on the abundance of the outer as well as the inner area sub-populations, i.e. $\partial N_{out}/\partial h_{out} = \partial G/\partial h_{out} < 0$ and $\partial F/\partial h_{out} < 0$. We also find $\partial G/\partial h_{in} < 0$ and $\partial F/\partial h_{in} < 0$, where the cross effects operate through migration and the inner area wolf predation (see Fig. 4). When the migration rate increases, the inner area sub-population could be kept at the same size when harvested at a higher rate.

The bioeconomic model

Having evaluated the basic mechanism determining the overall harvest and population size in the outer and inner area for given harvesting rates, we now proceed to construct the bioeconomic model. The traditional exploitation of the moose in Scandinavia has been directed by maximising current profit, i.e. the meat value corrected for browsing damage, for stable populations (e.g. Skonhoft & Olaussen 2005). This harvesting scheme is also explored here, and it is straightforward to show that it coincides with the steady-state of the dynamic problem of maximising present-value profit for a zero discount rate (see e.g. Clark 1990, Chapter 2). Therefore, the following solution concept represents the equilibrium of the far more complex dynamic maximisation problem. It should also be noted that it is difficult to say very much analytically about the dynamics of the present-value profit maximising problem within this time discrete population model framework. One may

Downloaded From: https://bioone.org/journals/Wildlife-Biology on 18 Apr 2024
Terms of Use: https://bioone.org/terms-of-use

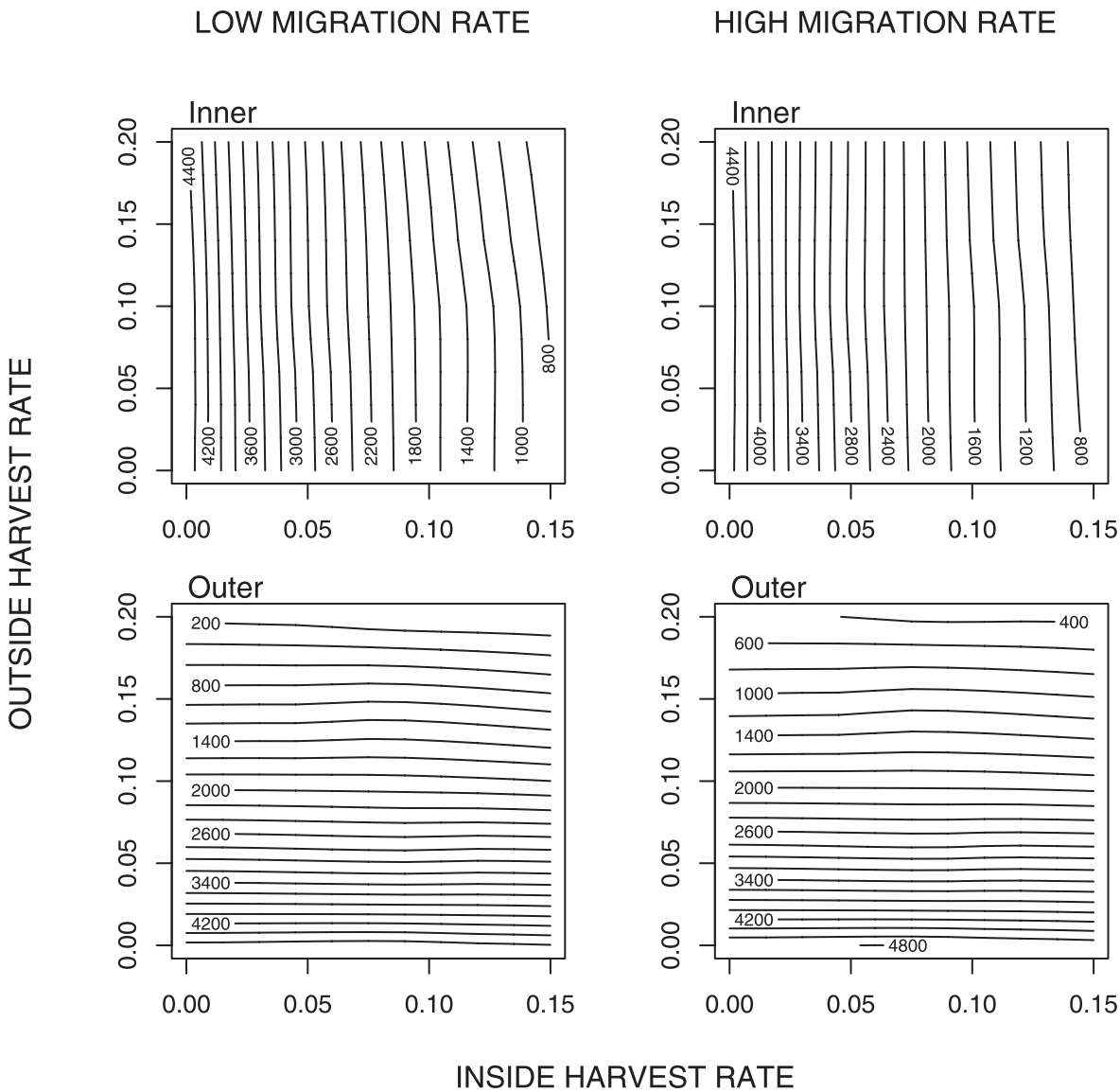

Figure 4. Equilibrium moose population sizes at the end of the summer for different harvesting rates outside and inside the wolf territory, when the model was run with a low migration rate (M = 0.2) and high migration rate (M = 0.9), respectively.

suspect that it has some similarities with saddle-point path type dynamics, as the profit is non-linear in the sub-populations (see main text below). It is also difficult to solve the dynamic optimisation problem numerically as it involves several state and several control variables.

The equilibrium profit for the landowners in the inner and outer area are given by

$$\pi_{in} = p_{in} h_{in} N_{in} - D_{in}((1-h_{in})N_{in} + M(1-h_{out})N_{out}) \quad (4),$$

and

$$\pi_{out} = p_{out} h_{out} N_{out} - D_{out}((1-M)(1-h_{out})N_{out}) \quad (5),$$

respectively, and where N_i (i = inner, outer) is the autumn populations size (i.e. just before harvest). The unit hunting license p_i (i = inner, outer) is the price that the hunters pay to the landowners, and $D_i(.)$ the damage cost function. Mattson (1994) observed a positive stock dependent willingness to pay for hunting licenses in Sweden while an ambiguous effect was observed between the price and the number of moose hunted. However, here we assume that the price in both areas is fixed and independent of the harvest and stock abundance. This is justified by the fact that there is generally competition among a large number of suppliers of hunting licenses.

Downloaded From: https://bioone.org/journals/Wildlife-Biology on 18 Apr 2024
Terms of Use: https://bioone.org/terms-of-use

However, the price may typically be different among the two areas, and the reason is that the presence of wolves makes it less attractive to hunt in the inner area, i.e. we may have $p_{in} \leq p_{out}$. $D_{in}(.)$, the damage cost function for the inner area, depends on the size of the inner area sub-population after harvesting plus the number of migratory individuals from the outer population after harvesting, as the damage only happens during the winter. Similarly, $D_{out}(.)$ is the damage cost function for the outer area, depending only on the non-migratory part of the outer area sub-population. The cost is additive in the sub-populations with $D_i(0)=0$ and increases with the number of animals, $D_i'(.) \geq 0$ (see Hörnberg 2001). We assume that $D_{out}=a_{out}(1\text{-}M)(1\text{-}h_{out})N_{out}$ and $D_{in}= a_{in}(1\text{-}h_{in})N_{in}+M(1\text{-}h_{out})N_{out}$, so that a_i (i= inner, outer) is the constant cost per animal. As the damage functions may also vary between the areas due to differences in the quality of the timber stands or productivity of the forests, we explored the model for different cost constants (see Table 1).

Results

The unified management scheme

Within the unified management scheme, the wildlife manager aims to find harvesting rates that maximise overall profit. When the manager gives equal weight to the profit of the landowners of the inner and the outer area, the optimal degree of exploitation is defined by

$$\max_{h_{in},h_{out}} (\pi_{in}+\pi_{out}) = p_{in}h_{in}N_{in}\text{-}D_{in}((1\text{-}h_{in})N_{in}+ M(1\text{-}h_{out})N_{out})+p_{out}h_{out}N_{out}\text{-}D_{out}((1\text{-}M)(1\text{-}h_{out})N_{out}) \quad (6)$$

subject to the equilibrium conditions $N_{in}=F(h_{in}, h_{out})$ and $N_{out}=G(h_{in}, h_{out})$.

To find the harvest rate that maximises profit, we differentiate Equation 6 with respect to h_{in} and separately with respect to h_{out}. We set each of the resulting equations to zero. Rearranging terms, we get the first order conditions of the optimisation:

$$p_{in}\left(N_{in}+h_{in}\frac{\partial F}{\partial h_{in}}\right) + p_{out}h_{out}\frac{\partial G}{\partial h_{in}} = D'_{in}(.)\left[(1\text{-}h_{in})\frac{\partial F}{\partial h_{in}}\text{-}N_{in} + M(1\text{-}h_{out})\frac{\partial G}{\partial h_{in}}\right]+ D'_{out}(.)\left[(1\text{-}M)(1\text{-}h_{out})\frac{\partial G}{\partial h_{in}}\right] \quad (7)$$

$$p_{out}\left(N_{out} + h_{out}\frac{\partial G}{\partial h_{out}}\right) + p_{in}h_{in}\frac{\partial F}{\partial h_{out}} = D'_{out}(.)\left[(1\text{-}M)(1\text{-}h_{out})\frac{\partial G}{\partial h_{out}}\text{-}(1\text{-}M)N_{out}\right]+ D'_{in}(.)\left[(1\text{-}h_{in})\frac{\partial F}{\partial h_{out}}+M(1\text{-}h_{out})\frac{\partial G}{\partial h_{out}}\text{-}MN_{out}\right] \quad (8)$$

when assuming an interior solution (i.e. $0<h_{in}<1$, $0<h_{out}<1$, and $N_{in}>0$ and $N_{out}>0$).

The optimal bioeconomic equilibrium condition for harvesting in the inner area (Equation 7) shows that harvesting should take place up to the point where the marginal combined net harvesting income is equal to the marginal combined browsing damage cost. The interpretation of condition (8) is equivalent. Hence, the marginal browsing cost in the inner as well as the outer area is taken into account when determining optimal harvest size of the outer area, and follows from the very nature of the unified management scheme. From these optimal conditions, it can be seen that the harvesting rates, and consequently the population size distribution between the areas, will only be influenced by relative price and marginal cost values.

The first order conditions (Equations 7 and 8), together with the ecological constraints $N_{in}=F(h_{in}, h_{out})$ and $N_{out}=G(h_{in}, h_{out})$, determine simultaneously the optimal harvesting rates h_i^u and N_i^u (i=in, out) (superscript 'u' indicates unified management). The number of harvested moose in the two areas follows as $h_{in}^u F(h_{in}^u, h_{out}^u)$ and $h_{out}^u G(h_{in}^u, h_{out}^u)$.

The numerical outcome from the model simulations largely confirms the general results presented above. When assuming linear damage cost functions (see Methods) but with very small costs per animal (scenario 1 in Table 2), the inner area should be harvested at a lower rate than the outer area due to the wolf predation. Exactly how much lower this rate should be will depend on the actual predation pressure. When the unit browsing cost is higher (scenario 2 in Table 2), this will increase the optimal harvesting rate in both areas as it then pays off to drive the stock size down and reduce the damage. However, if the cost is higher only in the inner area (scenario 3 in Table 2), the migration rate will have a large effect on the optimal strategies. At low migration rates, the inner area should be harvested at a higher rate than in scenario 1, whereas at higher migration rates, the optimal harvesting rate for the outer area will also be higher. Finally, if the harvesting value is reduced for the inner area (scenario 4 in Table 2), e.g. because the

Downloaded From: https://bioone.org/journals/Wildlife-Biology on 18 Apr 2024
Terms of Use: https://bioone.org/terms-of-use

Table 2. Contrasting the unified and non-unified management schemes for four different scenarios: 1) similar harvesting value and browsing cost for both areas ($p_{out} = p_{in} = 10$ and $a_{out} = a_{in} = 0.15$), 2) similar harvesting value and browsing cost for both areas, but high browsing costs ($p_{out} = p_i = 1$ and $a_{out} = a_{in} = 1.5$), 3) higher browsing cost inside ($a_{in} = 1.5$, other values as in scenario 1), and 4) lower harvesting value inside than outside ($p_{in} = 0.5$, other values as in scenario 1). In A) the migration rate is low (M = 0.2) and in B) the migration rate is high (M = 0.9). All cost and benefit values are in 1000 NOK. H_{in} and H_{out} are the harvesting rates inside and outside the wolf territory, respectively, whereas N_{in} and N_{out} are the equilibrium population densities in the two areas. Difference (%) in yield between the unified and non-unified solution is given. In all cases, the non-unified solution is less profitable when comparing the total yield.

	Unified				Non-unified[1]				
Scenario	H_{in}	H_{out}	N_{in}	N_{out}	H_{in}	H_{out}	N_{in}	N_{out}	Difference (%)
A)									
1	10.5%	12.0%	1555	1625	12.5%	13.5%	1247	1434	3
2	15.0%	18.0%	650	717	15.0%	17.5%	350	854	14
3	15.5%	14.0%	666	1340	15.0%	13.5%	678	1361	2
4	11.0%	12.0%	1469	1625	13.0%	13.5%	1133	1363	5
B)									
1	11.0%	12.5%	1584	1472	13.5%	12.5%	1139	1455	5
2	15.5%	17.0%	657	749	16.5%	11.5%	270	1559	115[2]
3	15.5%	17.0%	657	749	16.0%	12.0%	626	1489	63
4	10.5%	12.5%	1584	1472	14.5%	11.0%	945	1675	6

[1] Represents the Nash equilibrium (note that the Nash equilibrium is found numerically).

[2] In this case, the total yield is negative for the non-unified solution. This is because the outer area is harvested at a very low rate thus causing high browsing damages inside.

wolves make it less attractive to hunt in the inner area, this will only have a small effect on the optimal harvesting rates when the migration rate is low, but it will result in a higher optimal harvesting rate for the inner area and lower optimal harvesting rate for the outer area when the migration rate is high.

Non-unified management policy

When there is no unified resource management policy, landowners aim to maximise their individual private profit, i.e. harvesting income minus browsing damage. However, because of the seasonal moose migration and wolf predation, there is nevertheless a strategic interdependency between the landowners. It is assumed that the economic equilibrium concept will be of the Nash-type (see e.g. Clark 1990), i.e. each of the landowners seeks to find a harvesting strategy that maximises their private profit while taking the harvesting activity of the other as given. The harvesting fractions consistent with maximum profit of the landowners of both the inner and the outer areas are then the Nash-equilibrium harvesting rates. This solution concept demands that the landowners have full information about each other's cost and benefit functions. Although this is a standard assumption in the Nash-type solution, it may generally be questioned for various reasons. However, in the present setting, with relatively homogeneous landowners and relatively open information flows, this assumption should not be too unrealistic.

Technically, the solution to the management problem of individual profit maximisation of this type occurs when the landowner of the inner area maximises (Equation 4) while taking the ecological constraint $N_{in} = F(h_{in}, h_{out})$ into account, and the landowner of the outer area maximises (Equation 5) while taking $N_{out} = G(h_{in}, h_{out})$ into account. The first order conditions of this problem (again assuming an interior solution) are

$$p_{in}\left(N_{in} + h_{in}\frac{\partial F}{\partial h_{in}}\right) = D'_{in}(.)\left[(1\text{-}h_{in})\frac{\partial F}{\partial h_{in}}\text{-}N_{in} + M(1\text{-}h_{out})\frac{\partial G}{\partial h_{in}}\right] \quad (9),$$

$$p_{out}\left(N_{out} + h_{out}\frac{\partial G}{\partial h_{out}}\right) = D'_{out}(.)\left[(1\text{-}M)(1\text{-}h_{out})\frac{\partial G}{\partial h_{out}}\text{-}(1\text{-}M)N_{out}\right] \quad (10),$$

where Equation 9 is for the inner area landowner and Equation 10 is for the outer area landowner. In Equation 9, the condition says that the inner area marginal private harvesting income should be equal to the marginal private browsing damage cost. The interpretation of the condition in Equation 10 is similar. Consequently, the damage caused by the outer area sub-population in the inner area is not taken into account by the outer area landowner. These optimal conditions are somewhat simpler than in the previous unified management scheme,

Downloaded From: https://bioone.org/journals/Wildlife-Biology on 18 Apr 2024
Terms of Use: https://bioone.org/terms-of-use

and the outer area harvesting price and marginal damage cost play no role in determining the private optimal strategies in the inner area, and *vice versa*.

The first order condition (Equation 9) together with the ecological constraint $N_{in} = F(h_{in}, h_{out})$ yields the inner area harvesting fraction as a function of the outer area harvesting fraction, $h_{in} = f(h_{out})$, and this will be the best-response function of the inner area landowner. Generally, we may expect the slope to be negative, $df/dh_{out} = f' < 0$, as more harvesting by the outer area landowner provides less scope for harvesting by the inner area landowner. In the same manner, the first order condition (Equation 10) together with $N_{out} = G(h_{in}, h_{out})$ yields the best-response function of the outer area landowner, $h_{out} = g(h_{in})$. The slope of this function is also expected to be negative, $g' < 0$. The interaction between these two best-response functions defines the Nash-equilibrium harvesting fractions, h_i^n (i = inner, outer), where superscript 'n' denotes the non-unified solution. Inserted in the ecological constraints, we next find the optimal population sizes: $N_{in}^n = F(h_{in}^n, h_{out}^n)$ and $N_{out}^n = G(h_{out}^n, h_{in}^n)$, and the number of harvested moose $h_{out}^n F(h_{in}^n, h_{out}^n)$ and $h_{in}^n F(h_{in}^n, h_{out}^n)$ inside and outside the wolf territory, respectively.

Based on the general optimisation results, the population size in the outer area will be higher in the non-unified management case than in the unified case, as the browsing damage of the outer area sub-population in the inner area is not taken into account, i.e. $N_{out}^u < N_{out}^n$. However, for the inner area sub-population, the opposite will occur, as the wolf preys on a larger migratory moose population, $N_{in}^u > N_{in}^n$. We also find that the profit differs between the non-unified and unified case, and that the total profit is lower in the non-unified case as the externalities due to the migration are taken into account in the unified case (see also Skonhoft et al. 2002). These results are confirmed by the numerical simulations which show that the outer area sub-population should generally be harvested at a lower rate (and hence, the population size will be larger) in the non-unified management scheme. See Table 2 for comparisons between the management schemes. This is most clearly seen when the migration rate and cost price per animal are high, as more of the browsing damage will take place in the inner area. In such circumstances, the difference in total yield between the social and private scheme is considerable (scenarios 2 and 3 in Table 2). The cross-over effect due to predation is apparent from the fact that it is optimal for the outer area landowner if the inner area is harvested at a low rate as the predation pressure on the migratory part of the outer area population then will be reduced. For the private profit in the inner area, the cross-over effect is much stronger, and the browsing damage caused by the migratory part of the outer area sub-population will increase as the migration rate increases. Generally, the private profit of the inner area landowner will be lower when the migration rate increases due to the increase in browsing damage.

Compared to the unified management scheme, the private profit of the outer area landowner will generally be higher in the non-unified management scheme, whereas the profit of the inner area landowner will be lower. Only in cases with a very low unit cost price due to browsing damage combined with a very high predation rate is the situation reversed.

Discussion

The management of many temperate ungulate species is likely to be influenced by the fact that animals move across management unit boundaries and between neighbouring landowners, who may hold contrasting management objectives. Yet relatively little attention has been paid to spatial aspects of harvesting. Here, we have shown that both ecological and economic factors can affect the optimal management of a spatially structured ungulate population, in a case where trade-offs between costs (browsing damage) and benefits (harvest income) vary spatially among landowners. Depending on the management scheme, we found that moose migration could have different effects on the optimal harvesting rates and thus the resulting population densities. In general, increasing migration rates resulted in larger discrepancies between the management schemes. We also demonstrated that the overall monetary yield is higher when landowners collaborate, i.e. when the managers are aiming at maximising the overall profit instead of the personal profit.

These may, in fact, be general results among northern ungulate populations as many are migratory and congregate on smaller winter ranges (Andersen 1991, Ball et al. 2001). Since the winter diet of many large herbivores often includes a higher proportion of economically important tree species or agricultural crops than their summer diet, a typical situ-

Downloaded From: https://bioone.org/journals/Wildlife-Biology on 18 Apr 2024
Terms of Use: https://bioone.org/terms-of-use

ation is thus that browsing costs are strongly asymmetrically distributed between the landowners. Moose browsing on Scots pine in Scandinavia is a well known example of such a scenario (Skonhoft 2005, Skonhoft & Olaussen 2005). We extend previous analyses of the role of migration by considering the new management situation facing many areas of Scandinavia (Nilsen et al. 2005), as well as around the world (Chapron et al. 2003, Smith et al. 2003); that recent recolonisation of large predators causes further variation in potential income from game harvesting between landowners. High wolf predation rates within a given area are known to lower the optimal harvest rate (Nilsen et al. 2005). Consequently, spatially variable wolf predation rates increase the asymmetry of the monetary yield caused by moose migration further as the landowner hosting most of the moose during the winter both receives high winter browsing costs and much lower harvesting rates due to wolf predation. As wolves will also prey on moose migrating in from outside their territory in winter, wolves increase the joint dependence, and this makes cooperation across management units even more important.

Optimal harvesting rates were affected by the migration rate under both management schemes. The differences between the unified and non-unified management schemes were minimal when migration rates were low, but became much more pronounced as the migration rate increased (i.e. stronger coupling). Although it is well documented that ungulates often migrate between summer and wintering grounds in temperate and arctic regions (e.g. Andersen 1991, Mysterud 1999, Ball et al. 2001), the proportion that migrates and the causes of variation in this parameter are rarely known. We may expect the proportion of migrants to increase with latitude as snow depth increases. Furthermore, annual variation in migration rates is likely due to varying snow conditions and temperature (Nelson 1995), while the role of density is little studied and has mainly been addressed with regard to dispersal and only for a limited number of species (in roe deer: Wahlström & Liberg 1995a,b, Pettorelli et al. 2003, and in red deer: Clutton-Brock et al. 2002). We suggest that future research should aim to improve our understanding of the movement patterns of large ungulates, as this will determine whether a unified management scheme is warranted or not.

Models are only as good as the assumptions they are based on. In addition to migration, there are uncertainties regarding the specific functional relationships for several factors. First, there is still large uncertainty surrounding the relationship between herbivore densities and browsing damage (Hörnberg 2001). We assumed a linear relationship between moose densities and browsing damage. Although our general results also seem to hold when assuming other functional relationships (exponential or asymptotic), the actual form of the relationship is of crucial importance when deciding target population sizes and harvesting quotas. Second, significant uncertainty still exists about the factors causing spatial and temporal variation in kill rates (Marshal & Boutin 1999, Sand et al. 2005, 2006). As the wolf kill rates on moose reported from Scandinavia are considerably higher than those reported from North America (Sand et al. 2005, 2006), the effects of wolf predation might have a much stronger impact here. Furthermore, in our deterministic approach, we have not considered any random noise affecting the population processes. In stochastic environments, however, the population growth rate, and therefore the potential harvestable surplus, tends to be lower than that predicted from purely deterministic models (Lande et al. 1994, Alvarez 2000). Finally, the actual functional form of the density-dependence function is known to affect the optimal harvesting rates (Runge & Johnson 2002). Thus, care should be taken in advising specific harvesting rates based on our results. However, pointing to the general insight of our findings is appropriate.

As more focus is put on the local management of renewable resources (*cf.* Article 2 in the Malawi principles), strong emphasis should also be put on cooperation between local managers. This could both increase the overall profit of mobile ecological resources, as well as reduce the asymmetry in the costs and benefits between stakeholders (Skonhoft & Olaussen 2005). The approach taken here enabled us to combine a sound biological model with formal bioeconomic analysis. The present model framework could easily be extended to include a finer level of detail, whenever necessary. We think it may be generally applicable in a wide range of economic, ecological and institutional settings, when studying migratory species representing both costs and benefits that vary spatially.

Acknowledgements - we would like to thank Tim Coulson, E.J. Milner-Gulland, Jean-Michel Gaillard, John Vucetich, Nigel G. Yoccoz and two anonymous referees for constructive comments in the process leading to this

Downloaded From: https://bioone.org/journals/Wildlife-Biology on 18 Apr 2024
Terms of Use: https://bioone.org/terms-of-use

paper. The Research Council of Norway provided funding for EBN and JMM (NFR project number 156367/530).

References

Alvarez, L.H.R. 2000: On the option interpretation of rational harvesting planning. - Journal of Mathematical Biology 40: 383-405.

Andersen, R. 1991: Habitat Deterioration and the Migratory Behavior of Moose (*Alces alces* L) in Norway. - Journal of Applied Ecology 28: 102-108.

Ball, J.P. & Dahlgren, J. 2002: Browsing damage on pine (*Pinus sylvestris* and *P-contorta*) by a migrating moose (*Alces alces*) population in winter: Relation to habitat composition and road barriers. - Scandinavian Journal of Forest Research 17: 427-435.

Ball, J.P., Nordengren, C. & Wallin, K. 2001: Partial migration by large ungulates: characteristics of seasonal moose *Alces alces* ranges in northern Sweden. - Wildlife Biology 7: 39-47.

Caswell, H. 2001: Matrix population Models: Construction, analysis and interpretation. - Sinauer Associates Inc., Massachusetts, 721 pp.

Chapron, G., Legendre, S., Ferriere, R., Clobert, J. & Haight, R.G. 2003: Conservation and control strategies for the wolf (*Canis lupus*) in western Europe based on demographic models. - Comptes Rendus Biologies 326: 575-587.

Clark, C. 1990: Mathematical Bioeconomics. - Wiley Interscience, New York, 386 pp.

Clutton-Brock, T.H., Coulson, T.N., Milner-Gulland, E.J., Thomson, D. & Armstrong, H.M. 2002: Sex differences in emigration and mortality affect optimal management of deer populations. - Nature 415: 633-637.

Eberhardt, L.L. 1997: Is wolf predation ratio-dependent? - Canadian Journal of Zoology 75: 1940-1944.

Eberhardt, L.L. 2002: A paradigm for population analysis of long-lived vertebrates. - Ecology 83: 2841-2854.

Eberhardt, L.L., Garrott, R.A., Smith, D.W., White, P.J. & Peterson, R.O. 2003: Assessing the impact of wolves on ungulate prey. - Ecological Applications 13: 776-783.

Edenius, L., Bergman, M., Ericsson, G. & Danell, K. 2002: The role of moose as a disturbance factor in managed boreal forests. - Silva Fennica 36: 57-67.

Ericsson, G. 1999: Demographic and Life History Consequences of Harvest in a Swedish Moose Population. - PhD thesis, Swedish University of Agricultural Sciences, Umeå.

Ericsson, G. & Wallin, K. 2001: Age-specific moose (*Alces alces*) mortality in a predator-free environment: Evidence for senescence in females. - Ecoscience 8: 157-163.

Ericsson, G., Wallin, K., Ball, J.P. & Broberg, M. 2001: Age-related reproductive effort and senescence in free-ranging moose, *Alces alces*. - Ecology 82: 1613-1620.

Fowler, C.W. 1987: A review of density dependence in populations of large mammals. - In: Genoways, H.H (Ed); Current Mammalogy, Volume 1. Plenum Press, New York, pp. 401-441.

Franzmann, A.W. & Schwartz, C.C. 1998: Ecology and Management of the North American Moose. - Smithsonian Institutions Press, Washington, 666 pp.

Gaillard, J-M., Festa-Bianchet, M. & Yoccoz, N.G. 1998: Population dynamics of large herbivores: variable recruitment with constant adult survival. - Trends in Ecology & Evolution 13: 58-63.

Gaillard, J-M., Festa-Bianchet, M., Yoccoz, N.G., Loison, A. & Toigo, C. 2000: Temporal variation in fitness components and population dynamics of large herbivores. - Annual Review of Ecology and Systematics 31: 367-393.

Gill, R. 1990: Monitoring the status of European and North American cervids. - The Global Environment Monitoring System Information Series No. 8. United Nations Environment Programme, Nairobi, 277 pp.

Gundersen, H. 2003: Vehicle collisions and wolf predation: Challenges in the management of a migrating moose population in southeast Norway. - PhD thesis, University of Oslo, Oslo.

Gundersen, H., Andreassen, H.P. & Storaas, T. 2004: Supplemental feeding of migratory moose *Alces alces*: forest damage at two spatial scales. - Wildlife Biology 10: 213-223.

Hayes, R.D. & Harestad, A.A. 2000: Wolf functional response and regulation of moose in the Yukon. - Canadian Journal of Zoology 78: 60-66.

Hörnberg, S. 2001: Changes in population density of moose (*Alces alces*) and damage to forests in Sweden. - Forest Ecology and Management 149: 141-151.

Kritzer, J.P. & Sale, P.F. 2004: Metapopulation ecology in the sea: from Levins' model to marine ecology and fisheries science. - Fish and Fisheries 5: 131-140.

Lande, R., Engen, S. & Sæther, B.E. 1994: Optimal Harvesting, Economic Discounting and Extinction Risk in Fluctuating Populations. - Nature 372: 88-90.

Lande, R., Engen, S. & Sæther, B.E. 2003: Stochastic Population Dynamics in Ecology and Conservation. - Oxford University Press, Oxford, 222 pp.

Lavsund, S., Nygren, T. & Solberg, E.J. 2003: Status of moose populations and challenges to moose management in Fennoscandia. - Alces 39: 109-130.

Marshal, J.P. & Boutin, S. 1999: Power analysis of wolf-moose functional responses. - Journal of Wildlife Management 63: 396-402.

Mattson, L. 1994: At kvantifisera viltets jaktvärde. - Sveriges Lantbruksuniversitet, Umeå, 14 pp. (In Swedish).

Maynard-Smith, J. & Slatkin, M. 1973: The stability of Predator-Prey Systems. - Ecology 54: 384-391.

Downloaded From: https://bioone.org/journals/Wildlife-Biology on 18 Apr 2024
Terms of Use: https://bioone.org/terms-of-use

Milner-Gulland, E.J. & Bennett, E.L. 2003: Wild meat: the bigger picture. - Trends in Ecology & Evolution 18: 351-357.

Milner-Gulland, E.J., Coulson, T.N. & Clutton-Brock, T.H. 2000: On harvesting a structured ungulate population. - Oikos 88: 592-602.

Milner, J.M., Nilsen, E.B., Wabakken, P. & Storaas, T. 2005: Keeping sheep or hunting moose? - Producing meat in areas with carnivores. - Alces 41: 49-61.

Mysterud, A. 1999: Seasonal migration pattern and home range of roe deer (*Capreolus capreolus*) in an altitudinal gradient in southern Norway. - Journal of Zoology 247: 479-486.

Nelson, M.E. 1995: Winter range arrival and departure of white-tailed deer in north-eastern Minnesota. - Canadian Journal of Zoology 73: 1069-1076.

Nilsen, E.B., Pettersen, T., Gundersen, H., Milner, J.M., Mysterud, A., Solberg, E.J., Andreassen, H.P. & Stenseth, N.C. 2005: Moose harvesting strategies in the presence of wolves. - Journal of Applied Ecology 42: 389-399.

Nilsen, E.B. & Solberg, E.J. 2006: Patterns of hunting mortality in Norwegian moose (*Alces alces*) populations. - European Journal of Wildlife Research 52: 153-163.

Pettorelli, N., Gaillard, J-M., Duncan, P., Maillard, D., Van Laere, G. & Delorme, D. 2003: Age and density modifies the effects of habitat quality on survival and movements of roe deer. - Ecology 84: 3307-3316.

Post, E., Peterson, R.O., Stenseth, N.C. & McLaren, B.E. 1999: Ecosystem consequences of wolf behavioural response to climate. - Nature 401: 905-907.

Reimoser, F., Armstrong, H. & Suchant, R. 1999: Measuring forest damage of ungulates: what should be considered. - Forest Ecology and Management 120: 47-58.

Runge, M.C. & Johnson, F.A. 2002: The importance of functional form in optimal control solutions of problems in population dynamics. - Ecology 83: 1357-1371.

Salas, L.A. & Kim, J.B. 2002: Spatial factors and stochasticity in the evaluation of sustainable hunting of tapirs. - Conservation Biology 16: 86-96.

Sand, H., Bergstrom, R., Cederlund, G., Ostergren, M. & Stalfelt, F. 1996: Density-dependent variation in reproduction and body mass in female moose *Alces alces*. - Wildlife Biology 2: 233-245.

Sand, H., Zimmermann, B., Wabakken, P., Andren, H. & Pedersen, H.C. 2005: Using GPS technology and GIS cluster analyses to estimate kill rates in wolf-ungulate ecosystems. - Wildlife Society Bulletin 33: 914-925.

Sand, H., Wikenros, C., Wabakken, P. & Liberg, O. 2006: Cross-continental differences in patterns of predation: will naive moose in Scandinavia ever learn?- Proceedings of the Royal Society of London, Series B 273: 1421-1427.

Skonhoft, A. 2005: The costs and benefits of a migratory species under different management schemes. - Journal of Environmental Management 76: 167-175.

Skonhoft, A. & Olaussen, J.O. 2005: Managing a migratory species that is both a value and a pest. - Land Economics 81: 34-50.

Skonhoft, A., Yoccoz, N.G., Stenseth, N.C., Gaillard, J.M. & Loison, A. 2002: Management of chamois (*Rupicapra rupicapra*) moving between a protected core area and a hunting area. - Ecological Applications 12: 1199-1211.

Smith, D.W., Peterson, R.O. & Houston, D.B. 2003: Yellowstone after wolves. - Bioscience 53: 330-340.

Solberg, E.J., Loison, A., Sæther, B.E. & Strand, O. 2000: Age-specific harvest mortality in a Norwegian moose *Alces alces* population. - Wildlife Biology 6: 41-52.

Storaas, T., Gundersen, H., Henriksen, H. & Andreassen, H.P. 2001: The Economic Value of Moose in Norway - A Review. - Alces 37: 97-107.

Stubsjøen, T., Sæther, B.E., Solberg, E.J., Heim, M. & Rolandsen, C.M. 2000: Moose (*Alces alces*) survival in three populations in northern Norway. - Canadian Journal of Zoology 78: 1822-1830.

Vucetich, J.A., Peterson, R.O. & Schaefer, C.L. 2002: The effect of prey and predator densities on wolf predation. - Ecology 83: 3003-3013.

Wabakken, P., Aronson, Å., Strømseth, T.H., Sand, H., Svensson, L. & Kojola, I. 2007: Ulv i Skandinavia. Statusrapport for vinteren 2006-2007. (In Norwegian with an English summary: The wolf in Scandinavia: Status report of the 2006-2007 winter). - Høgskolen i Hedmark Oppdragsrapport nr. 6-2007, 50 pp.

Wabakken, P., Sand, H., Liberg, O. & Bjarvall, A. 2001: The recovery, distribution and population dynamics of wolves on the Scandinavian peninsula, 1978-1998. - Canadian Journal of Zoology 79: 710-725.

Wahlstöm, L.K. & Liberg, O. 1995a: Contrasting dispersal patterns in two Scandinavian roe deer *Capreolus capreolus* populations. - Wildlife Biology 1: 159-164.

Wahlström, L.K. & Liberg, O. 1995b: Patterns of dispersal and seasonal migration in roe deer (*Capreolus capreolus*). - Journal of Zoology 235: 455-467.

Wallin, K., Cederlund, G. & Pehrson, Å. 1996: Predicting body mass from chest circumference in moose *Alces alces*. - Wildlife Biology 2: 53-58.

Wam, H.K., Hofstad, O., Nævdal, E. & Sankhayan, P. 2005: A bio-economic model for optimal harvest of timber and moose. - Forest Ecology and Management 206: 207-219.

Downloaded From: https://bioone.org/journals/Wildlife-Biology on 18 Apr 2024
Terms of Use: https://bioone.org/terms-of-use