BioOne COMPLETE

Further Improvements to the Photoelectric Method for Measuring Motile Responses of Chromatophores 1

Authors: Fujii, Ryozo, Yamada, Takashi, and Oshima, Noriko

Source: Zoological Science, 17(1) : 33-45

Published By: Zoological Society of Japan

URL: https://doi.org/10.2108/zsj.17.33

BioOne Complete (complete.BioOne.org) is a full-text database of 200 subscribed and open-access titles in the biological, ecological, and environmental sciences published by nonprofit societies, associations, museums, institutions, and presses.

Your use of this PDF, the BioOne Complete website, and all posted and associated content indicates your acceptance of BioOne's Terms of Use, available at www.bioone.org/terms-of-use.

Usage of BioOne Complete content is strictly limited to personal, educational, and non - commercial use. Commercial inquiries or rights and permissions requests should be directed to the individual publisher as copyright holder.

BioOne sees sustainable scholarly publishing as an inherently collaborative enterprise connecting authors, nonprofit publishers, academic institutions, research libraries, and research funders in the common goal of maximizing access to critical research.

Downloaded From: https://bioone.org/journals/Zoological-Science on 16 Jul 2024
Terms of Use: https://bioone.org/terms-of-use

ZOOLOGICAL SCIENCE **17**: 33–45 (2000) © 2000 Zoological Society of Japan

Further Improvements to the Photoelectric Method for Measuring Motile Responses of Chromatophores[1]

Ryozo Fujii*, Takashi Yamada† and Noriko Oshima

Department of Biomolecular Science, Faculty of Science, Toho University, Miyama, Funabashi, Chiba 274-8510, Japan

ABSTRACT—With the intention of simplifying construction and operation, improvements have now been made to a photoelectric system for measuring the motile responses of chromatophores. Introduction of chopper-stabilized operational amplifiers with a complimentary metal-oxide semiconductor (C-MOS) input has brought about a much improved stability of the electronics. Such a feature has been found to be especially suitable for measurements requiring higher amplification and longer periods of time, e.g., the detection of the effects of various factors on bright-colored chromatophores. The use of appropriate color filters that limit the spectral range of light used for measurement has also proven to be important. By installing a small filter close to the photosensor, we can now record the responses of particular types of chromatophores more selectively, while visually monitoring the states of all kinds of chromatophores in natural color. To minimize the influence of motile activities of xanthophores and/or erythrophores, the use of an orange-to-red long-pass filter is appropriate to optimize recording the melanophore responses. By contrast, the responses of xanthophores or erythrophores can be recorded more easily by employing a violet-to-blue band-pass filter, because that increases the contrast of images of these cells against the background. Using an orange-red variety of the medaka *Oryzias*, we have also recorded photometrically the responses of leucophores, whose organelles are light-scattering. A long-pass filter was efficient in excluding the influences of co-existing xanthophores.

INTRODUCTION

Quantitative and reliable assessment of cellular responses is indispensable for physiological studies of motile mechanisms as well as the regulatory systems of effector cells. Among methods used to record the motile responses of chromatophores, a photoelectric technique has recently gained much popularity because of its reliability and wider applicability (Fujii, 1959; Oshima and Fujii, 1984; Odman *et al*., 1992; cf. also Fujii, 1993). In fact, that method has greatly contributed to progress in characterizing the physiology of chromatophores, and has led to a deeper understanding of mechanisms involved in cellular motility as well as those underlying color changes of animals.

While employing that method, we have continued to improve the system for better applicability, and in fact, we have made several significant improvements since we last presented a solid description about it (Oshima and Fujii, 1984). Employing those improved techniques, we have actually performed many experiments, and some of those results have been recently published including reports by Fujii *et al*. (1991, 1993), Hayashi and Fujii (1993) and others from our laboratory.

Meanwhile, several research groups working on the physiology of chromatophores have frequently urged us to give more detailed descriptions about our techniques than what was briefly reported in the Methods sections of articles cited above. Therefore, we have decided to provide the details of our latest version of the apparatus, along with some suggestions useful for the actual application of the method to various types of chromatophores. It should be emphasized here that this system may easily be adapted to laboratory courses in cell physiology, because the expenditure required for preparing the installation is relatively small.

EXPERIMENTAL

Materials

In the experiments presented in this communication, only a few species of freshwater teleosts were employed, but we believe that the method described here can be applied widely to many species of teleosts and other groups of animals as well. The referred to species includes the dark chub *Zacco*

* Corresponding author: Tel. +81-03-3480-5891;
FAX. +81-03-3480-5891.
E-mail: fujii@biomol.sci.toho-u.ac.jp

[1] This paper is dedicated to the late Professor Emeritus H. Kinosita of the University of Tokyo, who passed away in February, 1999.

† Present address: Diagnostics Research Laboratories, Fujirebio, Inc., Komiya-cho, Hachioji, Tokyo 192-0031, Japan.

Downloaded From: https://bioone.org/journals/Zoological-Science on 16 Jul 2024
Terms of Use: https://bioone.org/terms-of-use

temmincki, the medaka *Oryzias latipes*, the platyfish *Xiphophorus maculatus* and the swordtail *X. helleri*. Adult specimens were obtained from local dealers, and prior to use were kept in freshwater aquariums for at least a few days to acclimatize. Chromatophores of the common dendritic type, namely melanophores, xanthophores, erythrophores and leucophores, were then subjected to examination of their motile responses.

When scales from medakas, platyfish or swordtails were employed, they were plucked from the anterior, dorso-lateral part of the trunk. In the case of dark chubs, scales from the dark longitudinal stripe along the middle part of the body were employed. Sometimes, split fin preparations (Fujii, 1959) were used with practically identical results to those obtained using scales from the same species. The excised skin specimens were immediately immersed in a physiological saline solution for teleosts which had the following composition: (in mM): NaCl, 125.3; KCl, 2.7; $CaCl_2$, 1.8; $MgCl_2$, 1.8; D-(+)-glucose, 5.6; Tris-HCl buffer, 5.0 (pH 7.3). The method of irrigating the skin pieces with physiological saline or with stimulant solutions during the measurements was essentially identical to that described elsewhere (Fujii and Miyashita, 1975; Oshima and Fujii, 1984).

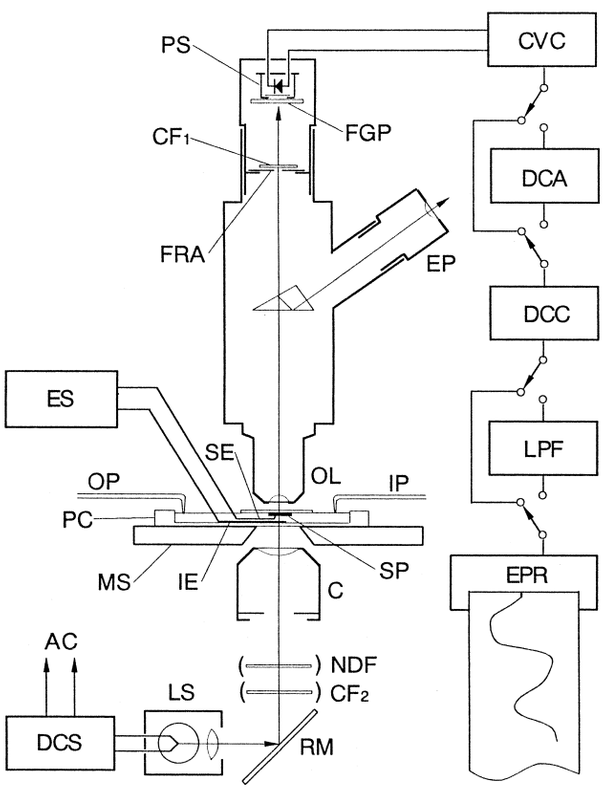

Fig. 1. Diagram of the entire system used to measure photoelectrically the motile responses of chromatophores. Explanations of abbrevations in the figure are arranged in the order from left to right. ES: electrical stimulator, AC: commercial alternating current source, DCS: stabilized DC power source, PC: perfusion chamber, OP: outlet pipette for experimental media, MS: microscope stage, LS: light source, PS: photosensor, CF_1: color filter for measurement, FRA: field-restricting aperture, IE: indifferent electrode, SE: stimulating electrode, RM: reflecting mirror, OL: objective lens, FGP: frosted glass plate, C: condenser, NDF: neutral density filter, CF_2: color filter for visual assessment of the effect of spectral restriction, IP: inlet pipette for experimental media, SP: skin preparation, EP: eye-piece, CVC: current-to-voltage converter, DCA: direct current amplifier, DCC: DC-component canceling circuit, LPF: low pass filter, EPR: electronic paper-chart recorder.

A peristaltic stroke pump commonly used in the laboratory can conveniently introduce normal physiological saline into the perfusion chamber at a constant rate (Fig. 1). Additional pumps may be employed to supply other various experimental solutions, and these are especially helpful when solutions other than the normal saline have to be applied over long periods of time. Usually however, we applied such experimental solutions manually by means of Pasteur pipettes. Manual application was especially important when only a small amount of a precious solution is available. To remove medium from the perfusing chamber, a vacuum stream pump operated by tap water is convenient, and when such is not available, a small draining pump or an additional stroke pump may be employed for this purpose.

Optical system

In most studies, transmission microscopes of the ordinary upright type (e.g. Optiphot XT, or Labophot II; Nikon, Tokyo) were employed (Fig. 1).

Each scale is affixed to a coverslip by means of a fine glass needle (diameter: ca. 0.3 mm) that has been glued with epoxy adhesive onto the surface of the coverslip at both ends. When a medaka scale is used, it is held in place with its bony scale side in contact with the coverslip. For dark chubs and xiphophorine fish however, chromatophores are present in the dermis attached to the inner surface of the bony scale (Iga and Matsuno, 1980, Fujii *et al.*, unpublished observations), and we therefore set those scales with the epidermal side in contact with the surface of the coverslip. When a split fin preparation is used, it is held spread by a pair of glass needles, as described by us elsewhere (Fujii, 1959; Fujii and Novales, 1969). The coverslip with the skin piece on its underside is then mounted in a shallow perfusion chamber, which is then put on the stage of the microscope for measurement (Fig. 1).

When we employed an inverted microscope (IMT-II, Olympus, Tokyo), a perfusion chamber designed to be fundamentally identical with that described elsewhere was used, because the skin pieces needed to be held onto the bottom of the chamber (Fujii and Novales, 1969). In that case, the skin piece is set with its dermal tissue containing chromatophores up. In addition, it should be noted that the top of the perfusion chamber should be covered with a glass plate. Without it, rippling in the surface of the perfusing solution causes disturbances in the optical pathway, which results in the fluctuation of the recording (Fujii and Novales, 1969).

The voltages of commercial alternating current sources fluctuates to a considerable degree especially when various power-consuming apparati are operating nearby. Such variations cause fluctuations in the luminosity of the light source

Downloaded From: https://bioone.org/journals/Zoological-Science on 16 Jul 2024
Terms of Use: https://bioone.org/terms-of-use

for the microscope, necessitating a voltage stabilizing device (DCS, Fig. 1). Direct-current voltage stabilizers which are readily easily available at moderate prices work well for such a purpose, although the wiring to the illuminating lamp should be altered to connect with this supply.

To realize higher quality recordings of the chromatophore responses, the management of the wavelength of light is also an important factor. For this purpose, appropriately selected color filters are conveniently employed. What kind of filter is appropriate for measuring a certain type of chromatophore will be discusses below in pertinent sections. We typically place one or two filters between the light source and the condenser lens of the microscope (CF_2, Fig. 1). Under such circumstances, visual monitoring of the chromatophores through the eye pieces needs be made with the colored light, although after setting the cell(s) to be measured at an appropriate position in the microscopic field, continued monitoring is not always necessary. When continued monitoring is imperative, it is very tiring and difficult to observe the cells in a monotonous, dark field. If such observations can be made in ordinary color, they are much easier, and more importantly, additional information can be obtained about the states of chromatophores whose motile activities are intentionally eliminated.

Such a condition can be easily realized by placing the filter inside the photographic column of the trinocular system in which the photosensor is installed (CF_1, Fig. 1). In practice, we place a small piece of filter just above the aperture that restricts the area of the skin to be measured (FRA, Fig. 1). A small broken piece of a glass filter may be used for this purpose. However, a small piece of the plastic sheet filter mentioned above could more conveniently be employed, because it can easily be cut into the desired size to fit inside the eyepiece (e.g., ca. 12×12 mm square).

Photosensing

The photoelectric transducing part of the system is fundamentally similar to that described by us previously (Oshima and Fujii, 1984). We have employed a high quality silicon photodiode (S1226-5BK, or S1226-5BQ; Hamamatsu Photonics, Hamamatsu), but a comparable item can be used satisfactorily. The sensor is installed inside the photographic column of the trinocular assembly (PS, Fig. 1). When we employ Nikon microscopes for example, a trinocular assembly of the T type was adopted, which enables us to measure motile responses while we monitor the cells through the binocular eye-pieces. Whichever microscope is selected, it is recommended that a trinocular system with such performance be used. Otherwise, one must employ one of the binocular eye-pieces for the sensor, and the other one to monitor the cells by eye.

The photodiodes employed and described in this article are of the metal can type, and the cathode terminal is connected to the metal covering. In order to minimize electrical disturbances from the outside therefore, it is recommended that the cathode lead of the item be connected to the ground side.

A diaphragm with a circular aperture in the center is commonly put on the plane of the intermediate image, i.e. the rear focal plane of the objective lens inside the eyepiece (FRA, Fig. 1). In most cases, we have used a circular aperture with 3.0 mm in diameter in combination with a 20-X objective lens. Thus, light transmittance through a circular area of the skin with a diameter of 150 μm is measured. In many cases, that area is sufficient to circumscribe the domain occupied by a single chromatophore. If necessary however, the measurement of light transmittance can be performed through an area of any dimension and size, and readers can refer to pertinent descriptions and discussion by Fujii and Miyashita (1979), Fujii *et al*. (1997) and Ödman *et al*. (1992).

If a larger aperture or a lower power objective lens is employed, net effects of the responses of a number of chromatophores are recorded, and thus, the recordings include a higher statistical significance (Fujii, 1959). Conversely, the area can be decreased by employing an objective lens with a higher magnification. For example, the size of the area measured will be decreased by one half when a 40-X objective lens is employed instead of 20-X lens. Alternatively, the area can be made smaller by installing a smaller aperture inside the eyepiece used for photometry. We have prepared apertures of various appropriate sizes ourselves, although such items can also be obtained from machine shops or from manufacturers of microscopes by special order. A metal washer fixed to a holed sheet processed to fit inside the eyepiece functions perfectly. Similar apertures can be prepared by photographic procedures. As an example, high contrast B/W film with a transparent base (e.g., Minicopy HR II, Fuji Photo Film, Tokyo) is a suitable material. A larger pattern of a negative image can be photographed and the processed film can be used conveniently since we can prepare an aperture of optional shape and size at will (cf. also Fujii and Miyashita, 1979).

Just above the light-introducing window of the photosensor, a finely ground thin glass plate is placed in order to diffuse lightrays homogeneously to the photosensing chip (FGP, Fig. 1). This avoids the inadequate transduction of light intensity owing to the heterogeneous photosensitivity of the semiconductor chip inside the sensor.

A mechanical stage adapted to the microscope stage is employed to position the image of chromatophore(s) in the center of the area to be measured. For accurate positioning of specimens, an eyepiece micrometer with a lattice pattern inscribed can be conveniently used for this purpose.

Electronic circuits

Figure 2 shows a diagram of the electronic processing part of the system as it is currently employed in our laboratory. The first step partitioned as Part 1 in the figure is the device which converts the changes in the current output of the photosensor into voltage changes (CVC in Fig. 1). For this purpose, an operational amplifier of a new type, namely a C-MOS chopper-stabilized input is used (OP_1; MAX430, CPA-type package; Maxim Integrated Products, Sunnyvale, CA). This item is so designed that the input voltage offset is automatically compensated by the built-in chopper-stabilized

Downloaded From: https://bioone.org/journals/Zoological-Science on 16 Jul 2024
Terms of Use: https://bioone.org/terms-of-use

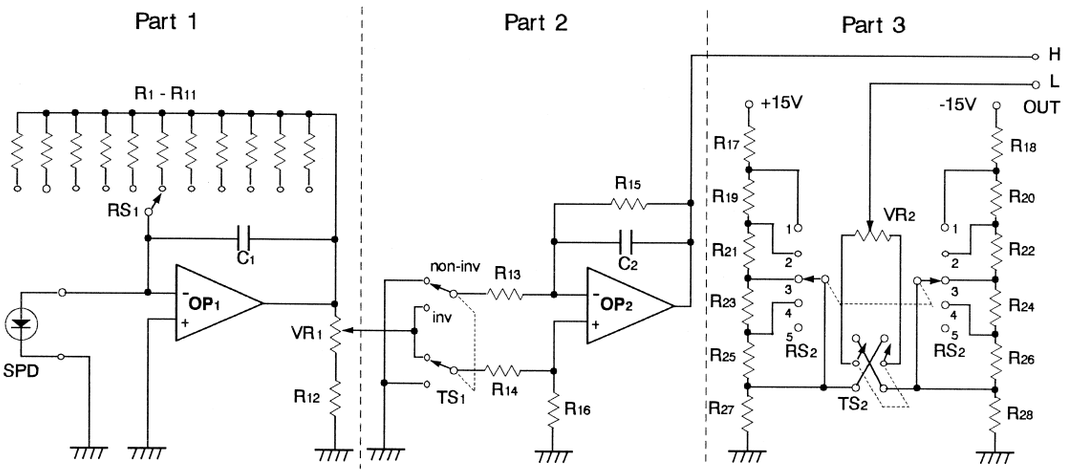

Fig. 2. Wiring diagram of the electronic processing part of the photoelectric apparatus for measuring motile responses of chromatophores. Explanations of abbrevations in each part are arranged in the order from left to right. **Part 1**: The portion that converts the current output of the silicon photodiode (SPD) into voltage. RS_1: rotary switch for changing the sensitivity stepwise, R_1– R_{11}: fixed resistors for feedback resistance for OP_1. In order to achieve a wide range alteration of the current-to-voltage conversion efficiency (sensitivity), those of 5, 10, 20, 50, 100, 200, 500 kΩ, 1, 2, 5, and 10 MΩ were selected here. OP_1: operational amplifier (MAX430), C_1: 0.01 μF capacitor, VR_1: 10-kΩ variable resistor for finer adjustment of the sensitivity, R_{12}: 4.7 kΩ. **Part 2**: The portion that reverses the polarity of the voltage signal and amplifies it. TS_1: toggle switch for altering the polarity of the signal, R_{13}, R_{14}: 10 kΩ, R_{15}, R_{16}: 100 kΩ, C_2: 0.01 μF capacitor, OP_2: operational amplifier (MAX430). The "non-inv" and "inv" settings are for non-inverting and inverting the signal. **Part 3**: The portion that adjusts the position of the recorder pen. R_{17}, R_{18}: 11.7 kΩ, R_{19}, R_{20}: 12.5 kΩ, R_{21}, R_{22}: 37.5 kΩ, R_{23}, R_{24}: 62.5 kΩ, R_{25}, R_{26}: 125 kΩ, R_{27}, R_{28}: 1.00 kΩ. By employing the above-described values of resistance for R_{17}–R_{28}, the adjustable range can be altered to be ±1.0 V (1), 500 mV (2), 250 mV (3), 100 mV (4) and 50 mV (5). RS_2: rotary switch for adjusting the range of the pen positioning on the recorder, TS_2: toggle switch for altering the direction of shift of pen positioning on the recorder, VR_2: 10-revolution precision variable resistor (10 kΩ), OUT: terminals for output signals to the differential input electronic recorder, between which the terminal marked "H" is connected to the high impedance side input terminal of the recorder, while that marked "L" is to the low impedance side.

mechanism at 400 Hz, in addition to the desirable feature of very high input impedance (10^{12} Ω). Thus, the troublesome offset adjustment that is inevitably required when using conventional operational amplifiers is not needed. Furthermore, no extra capacitors and/or resistors are needed for the offset correction. Such favorable features of the device also provide a further benefit in that we need not be concerned about a possible increase of the offset in a long range. Other similar chopper-stabilized operational amplifiers, such as MAX420/421/422/423 (Maxim Integrated Products), ICL7652 (Harris, Melbourne, FL) or LTC1052 (Linear Technology, Milpitas, CA), can also be used, and we have actually employed a MAX421 successfully. Without need of additional electronic parts for offset compensation however, the item used in the present study, a MAX 430, is especially convenient for those unfamiliar with handling electronic circuitry.

R_1–R_{11} are fixed resistors for feedback resistance of OP_1. By turning a rotary switch (RS1), the efficiency of the current-to-voltage conversion can be altered over a wide range. However, the selected resistances denoted in the legend to Figure 2 allow us to make only coarse changes in the sensitivity. Thus we added a variable resistor, VR_1, to attenuate the output voltages more finely and continuously. In the case shown in Figure 2, the sensitivity of each step can be finely adjusted from 100% down to 30%.

Since we employ sufficiently high quality operational amplifiers that enable us to execute the current-to-voltage conversion very efficiently, there is usually no need to further amplify the signal. Therefore, the amplifier part shown as DCA in Figure 1 can be abbreviated, except when very high sensitivity is needed, such as in recording the responses of very lightly pigmented xanthophores or erythrophores. In the case demonstrated in the figure, an amplifier with only a low factor (X 10) was installed which was coupled with another optional device to reverse the polarity of the voltage signal. An operational amplifier of a similar type to that used in the first step was again employed. By turning a double-pole double-throw switch (TS_1), the polarity of the signal can easily be changed. We usually record the increase in light transmission, i.e., the aggregation of chromatosomes in the light-absorbing chromatophores, as an upward shift of the trace on the record. Sometimes, one may want to have recordings on which the progress of pigment aggregation brings about the movement of the pen in the opposite direction. In such a case, the device works conveniently. Actually, the circuit functions as a non-inverting direct current amplifier when the switch is set to the "non-inv" side. If the switch is turned to "inv", it acts as an inverting amplifier. The ratios R_{15}/R_{13} and R_{16}/R_{14} provide the amplification factors. When the values of resistance described in the legend are adopted, the voltage amplification of this part becomes 10.

The final step (Part 3) of Figure 2 is the device for positioning the pen at the desired position on the chart before beginning the recording. By turning TS_2, we can change the adjustable range of the pen location to an appropriate one. By adopting values of resistance for R_{17}–R_{26} as described in the

Downloaded From: https://bioone.org/journals/Zoological-Science on 16 Jul 2024
Terms of Use: https://bioone.org/terms-of-use

legend, the range can be altered to be 1.0 V, 500, 250, 100 or 50 mV. It is recommended that a narrower setting be selected because the adjustment can be performed more finely and stably. The actual location of the pen on the recorder is adjusted by turning the precision variable resistor, VR_2.

In order to simplify the system, we designed the direct current supply in this part to be from a common source for driving the operational amplifiers. Thus, we determined the values of resistance of R_{17}–R_{28} assuming the voltage values of the source to be exactly +15.0 and –15.0 V. We usually use a handmade power source, in which integrated circuits supply stabilized +15 V and –15 V. The sanctioned error of the commonly available voltage-stabilizing units is ±5%. Thus the output voltage of the constructed power supply does not coincide exactly with the values indicated. Such an error naturally brings about a proportional error in the ranges of adjustable values. In practice however, such errors do not give rise to serious problems in the system, because the positioning of the pen is a relative one. If one wants to have more precise voltage supplies to shift the pen, constant current sources coupled with precision fixed resistors may be employed, and actually, we employed such circuits in earlier versions of the apparatus.

The signal with the appropriately compensated DC component finally leads to an electronic chart recorder with a differential input type. We use an R-61 or an R-62 (Rika Denki, Tokyo), or an EPR-10B or an EPR-231A (Toa Electronics, Tokyo), but we believe that most commercial recorders would be suitable for this purpose.

The motile responses of chromatophores are relatively slow phenomena, when compared with many other faster biological responses such as the contraction of various musculatures. In fact, the time constant of chromatophore responses should be longer than 1 sec even in the fastest cases. Thus, the frequency characteristics of the electronic division is not required to be so high, and there is no need to employ faster recording devices, such as electromagnetic or cathode-ray oscilloscopes. Therefore, we added high quality capacitors C_1 and C_2 in the circuits (Fig. 2) which are primarily to avoid undesirable oscillations in the operational amplifiers and to reduce inevitable artificial deflections, which occur when RS_1 or TS_1 is varied.

As mentioned earlier, the motile responses of xanthophores or of erythrophores give rise to changes in the light transmission within rather limited ranges, and thus, a higher amplification of the signal is needed. Even though the utmost care had been taken in constructing and wiring the circuits, some noise was inevitably introduced in this system. It is sometimes possible that electric equipment operating in or near the laboratory generates such noise. The careful connection to grounding of various components in the system, such as conductor parts of the microscope, is usually effective in reducing such trouble.

In this way, most problems may usually be overcome. Sometimes however, one might fail to reduce the noise, especially when an apparatus that generates vigorous electrical disturbances is operating. In such cases, a low-pass filter is helpful, which diminishes noises of higher frequencies, since most noises are of higher frequencies compared with signals due to chromatophore responses. For this purpose, we adopted a low pass filter (LPF) of the second order Butterworth type that can easily be designed to have appropriate frequency characteristics (Fig. 3). In our facility however, such a device has essentially been unnecessary. We also presume that in most laboratories, such a device may not be required under usual conditions. Therefore, the circuit

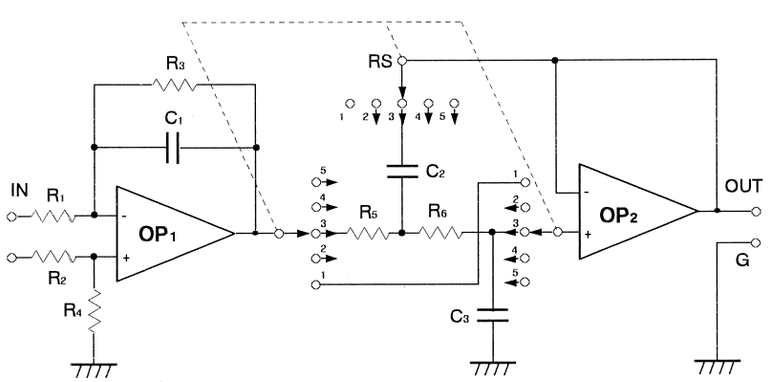

Fig. 3. Wiring diagram of the low-pass filter (LPF) of the second order Butterworth type. This device is optional and is used when the noise is unavoidable. It is designed to be placed between the above-described interface (Fig. 2) and the electronic chart recorder. Since the output of the interface is for a differential input recorder, a differential input amplifier is appended as shown in the left part of the diagram. The LPF division was designed to be able to alter the cutting frequency in stepwise fashion. By turning the 3-circuit rotary switch (RS), we can select an appropriate cutting frequency among those previously set. In the circuit demonstrated, 10, 2, 0.5, and 0.2 Hz were selected. When we set the RS at "1", the circuit works as a voltage follower, and the signals go through it without modulation. When the RS is positioned at "2", "3", "4", or "5", the circuit functions as an LPF with the cutting frequency of 10, 2, 0.5 or 0.2 Hz, respectively. To obtain the indicated cutting frequencies, R_5, R_6, C_2 and C_3 have to be selected to have adequate values in combination. The calculated and adopted values shown are as follows: Setting "2" (cutting frequency: 10 Hz), C_2 = 0.2 μF, C3 = 0.1 μF, and $R_{5,6}$ = 112.5 kΩ. Settings "3", "4", and "5" (2, 0.5, and 0.2 Hz, respectively), C_2 = 2.2 μF, C_3 = 1.1 μF, while for R_5 and R_6 were calculated to be 56.3, 225, and 563 kΩ for the three settings, respectively. IN: input terminals to be connected to the output terminals of the main electronic portion (Fig. 2), OUT: output terminals to be connected to the electronic recorder.

Downloaded From: https://bioone.org/journals/Zoological-Science on 16 Jul 2024
Terms of Use: https://bioone.org/terms-of-use

was built in a separate housing as an optional device, and that device can be placed between the above-described interface and the recorder if necessary. Since the output of the interface was of the differential type for the differential input recorder (Fig. 2), the LPF should be preceded by the differential input. For this purpose therefore, a simple differential input amplifier was appended, as shown in the left part of the diagram.

The latter half of Figure 3 is the LPF proper, in which the cutting frequency can be altered at 4 steps. The cutting frequency is defined as the frequency of the input signals at which the amplitude of those signals is decreased 50 %, and at which signals at higher frequencies are effectively eliminated. By turning the rotary switch with triple circuits (RS), we can select an appropriate cutting frequency among those set beforehand. When we set RS at position "1", the circuit works as a voltage follower, and the signals go through it without modulation. When we set RS at position "2", "3", "4", or "5", the device works as a low pass filter with a cutting frequency of 10, 2, 0.5 or 0.2 Hz, respectively. To obtain these four cutting frequencies, four sets of R_5, R_6, C_2 and C_3 were prepared with the values noted in the figure legend. By employing commonly available capacitors for C_2 and C_3, appropriate values of R_5 and R_6 were calculated. In our tests, a cutting frequency of 0.5 Hz was found to yield good results without noticeable deformation of cellular responses on the recording. Common high performance operational amplifiers may be used as OP_1 and OP_2 (Figure 3). However, we again employed MAX430s as employed in earlier steps of electronic division (Fig. 2).

Electrical stimulation

In some experiments, the sympathetic fibers controlling chromatophores were stimulated by applying pulses to the rostral part of isolated pieces of skin. The method was fundamentally identical to that employed in earlier studies using isolated fin pieces (Fujii and Novales, 1969; Fujii and Miyashita, 1975), but modified somewhat for application to scales (Fujii and Miyashita, 1979). An electronic stimulator (SEN-3201, Nihon Kohden, Tokyo) was used in these trials. In most measurements however, the skin piece was stimulated in a field of sine-wave alternating current generated by a CR oscillator (AG-203, Kenwood, Tokyo). Such an electrical field is known to effectively stimulate sympathetic fibers to liberate neurotransmitters (Fujii and Novales, 1968). The stimulating waves were monitored on a storage oscilloscope (5111A, Tektronix, Beaverton, OR).

Chemical stimulation

A K^+-rich saline solution was employed to aggregate pigmentary organelles in light-absorbing chromatophores, including melanophores, xanthophores and erythrophores, and to disperse light-scattering organelles (leucosomes) in leucophores. Elevated concentrations of K^+ ions are known to act as a sympathetic stimulus via the release of adrenergic transmitter from postganglionic fibers (Fujii, 1959, 1993; Fujii and Oshima, 1986). Saline containing 50 mM K^+ was exclusively used, in which the concentration of Na^+ ions was compensatorily decreased so that the final osmolarity was the same as a standard saline solution.

Norepinephrine (hydrochloride; racemic modification; Sankyo, Tokyo) was used to induce the aggregation of pigment in chromatophores. Its concentration is given in terms of the physiologically active L-(–)-isomer. As a sympathetic neurotransmitter, that amine has been shown to aggregate chromatosomes in light-absorbing chromatophores via the activation of α-adrenoceptors (Fujii, 1993; Fujii and Miyashita, 1975; Fujii and Oshima, 1986), and to disperse light-scattering organelles in leucophores of some cyprinodont fish via β-adrenoceptors (Obika, 1976; Iga *et al.*, 1977; Fujii, 1993). Other drugs employed during the measurements reported in this study include an α-adrenergic blocker, phentolamine (mesylate; Ciba-Geigy, Basel), a Ca^{2+}-channel blocker of the N type, ω-conotoxin GVIA (Sigma Chemical, St. Louis, MO), a mammalian endothelin-1 (ET-1; human, porcine, etc., Sigma Chemical) and a selective antagonist for the ET_B receptor, BQ-788 (Na salt; Banyu Pharmaceutical, Tokyo).

All tests using skin specimens were carried out at room temperature between 20 and 27°C.

Application to melanophores

Melanophores are the most easily measurable chromatophores for their responses, since they contain very darkly pigmented organelles (melanosomes) and because the influences of chromatophores of other types are limited. For practical purposes therefore, special color filters may not be required. However, a sharp-cut filter eliminating lightrays in the shorter spectral region (long-pass filter) is useful, especially when heavily pigmented erythrophores are present within the area to be measured. We originally employed an orange-red filter for this purpose (e.g., O-55, Toshiba Glass, Tokyo; Oshima and Fujii, 1984). Later, a color filter with a longer cutoff wavelength was used to more effectively eliminate lightrays that alter the activities of xanthophores and erythrophores (R-61, Toshiba Glass; Hayashi *et al.*, 1996). Most recently, we have used plastic sheet-filters to replace the glass ones. Among such sheets that are commercially available, triacetate filters of Fuji Photo Film (Tokyo), such as SC-54, -56, or -58, have profitably been employed. In our recent measurements on xanthophores, we generally use an SC-54 filter which eliminates lightrays shorter than 540 nm in wavelength. The comparable sharp-cut filters of other manufacturers should also be useful for such purposes. Gelatin filters of analogous characteristics, such as those supplied by Eastman Kodak (e.g., 16, 21, or 23A; Rochester, NY) may also be used, although they are a little fragile compared with the plastic ones described above. Whether the influences of motile activities of these chromatophores have been successfully eliminated can be confirmed by viewing the cells through the microscope with the filtered light. When cells to be eliminated of their motility become practically invisible, the trial is certainly successful (Fig. 4B, I).

As an example of the recording using the apparatus

Downloaded From: https://bioone.org/journals/Zoological-Science on 16 Jul 2024
Terms of Use: https://bioone.org/terms-of-use

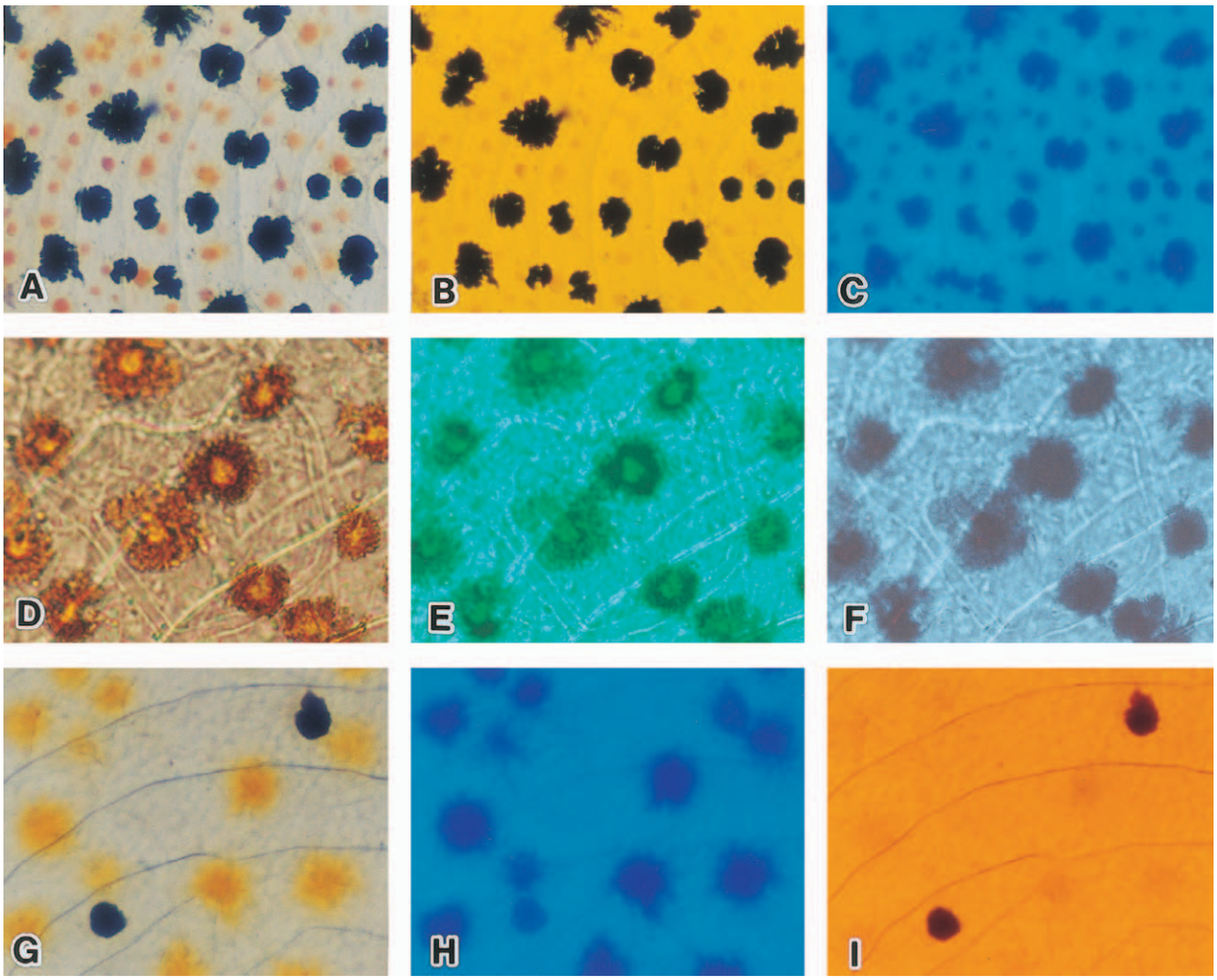

Fig. 4. Photomicrographs showing the effects of restricting wavelengths of light illuminating the skin specimens. (**A**) Melanophores and xanthophores in a scale from a wild-type medaka, *Oryzias latipes*, as viewed by the standard illumination, employing a natural color balancing filter (NCB, Nikon, Tokyo). Being equilibrated in saline containing 50 mM K^+, melanosomes and xanthosomes are mostly aggregated into perikarya of the chromatophores. ×160. (**B**) The same part of skin as shown in **A**, but the illuminating light spectrum is restricted by an orange filter (SC-54, Fuji Photo Film, Tokyo). Melting into the background, xanthophores became practically invisible. The condition is favorable for measuring the response of melanophores. (**C**) The same part of skin as (**A**), but the light spectrum is restricted by a violet band-pass filter (BPB-45); contrast of the images of xanthophores was increased. (**D**) Erythrophores in a scale from a swordtail, *Xiphophorus helleri*. Erythrosomes were aggregated by treating the scale with 2.5 μM norepinephrine. An NCB filter was used. ×320. (**E**) The same part of the skin as (**D**), but the illuminating light spectrum is restricted by a blue band-pass filter (BPB-50). The contrast of the testaceous part of the erythrophores was increased, while their central yellowish parts still remain rather pale and are a shade of green. (**F**) The same part of the skin as (**D**), but the illuminating light spectrum is restricted by a violet band-pass filter (BPB-45). Note that both testaceous and yellowish parts of the cells became dark; this condition is favorable for measuring the response of the erythrophores. (**G**) Two leucophores and several xanthophores in a scale from an orange-red medaka viewed using the NCB filter. Being equilibrated in normal saline, xanthophore inclusions are dispersed within the cells, while leucosomes are completely aggregated into the perikarya. ×320. (**H**) The same part of skin as in (**G**), but the light spectrum is restricted by a violet band-pass filter (BPB-45). Note that the images of xanthophores are much more distinct. If the measurement is performed in an area without leucophores, the responses of xanthophores can be measured adequately. See also panel "C" for reference. (**I**) The same part of skin as (**G**), but the light spectrum is restricted by an orange filter (SC-54). The images of xanthophores became merged into the background, and this condition is favorable for measuring the response of leucophores selectively.

described in this report, Figure 5 illustrates the motile responses of a single melanophore in a scale from a dark chub, *Zacco temmincki*. In that recording, we can see that electrical field stimulation rapidly aggregates melanosomes. The inhibitory effect of an N-type Ca^{2+}-channel blocker, ω-conotoxin GVIA, on the action of the field stimulation is then exhibited, and finally, a sufficiently strong solution of norepinephrine (NE) was applied. A pronounced aggregation of melanosomes then quickly took place, as seen in the right part of the recording.

In the skin of bluish damselfishes, e.g., the common blue damselfish *Chrysiptera cyanea*, melanophores are closely associated with motile iridophores (Kasukawa *et al.*, 1985, 1987). The color of the light reflected from the iridophores

Downloaded From: https://bioone.org/journals/Zoological-Science on 16 Jul 2024
Terms of Use: https://bioone.org/terms-of-use

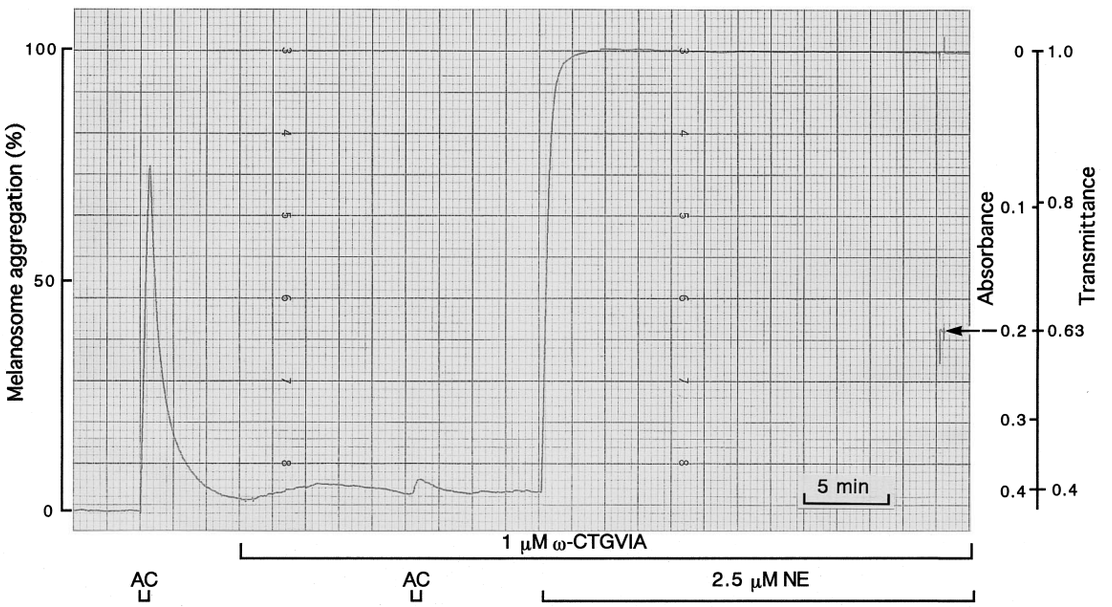

Fig. 5. A typical photoelectric recording showing the responses of a single melanophore in the scale from a dark chub, *Zacco temmincki*, along with indications about the physiological treatments on the bottom, and those of the ordinates on both sides. In order to minimize the influence of motile responses of xanthophores that exist within the area of measurement, the recording was performed using a long-pass filter (SC-56) installed inside the eyepiece in the photomicrographic column of the microscope (CF_1, Fig.1). Abscissa, time; the time scale is indicated by a horizontal bar (5 min) on the bottom right part of the figure. The upward shift of the trace indicates the increase in light transmittance, namely the melanosome-aggregating response of the cell. On the ordinate displayed on the left, the magnitude of response is expressed as a percentage of the maximal extent of pigment aggregation attained during the course of measurement, taking the fully dispersed state as zero. A sudden decrease in the light transmittance in the right part of the recording is due to the insertion of a neutral density filter (ND-0.2, Fuji Photo Film; absorbance: 0.2, or transmittance=0.63) for 15 sec across the light path. In addition to the absorption 0.2, values of the absorption or of the transmission were calculated and graduated on the ordinate seen on the right. After equilibration in physiological saline, an alternating current field stimulation (AC; sine wave, 10 Hz. 0.7 V/mm) was applied. A rapid aggregation of melanosomes took place. The action of the field stimulation was inhibited by ω-conotoxin GVIA (ω-CTGVIA), but the action of norepinephrine (NE) was not. Discussion concerning this and relevant results will be presented in a separate paper. This and the following photoelectric recordings are all unretouched.

may be described as varying between violet and bluish green. Being complementary, the color of the iridophores as viewed by transmitted light assumes a greenish yellow to red color (Kasukawa *et al.*, 1987). In order to minimize the disturbing effects of these iridophores, therefore, a red filter is useful. Usually, we use an SC-60 filter (Fuji Photo Film) to accurately record the responses of such melanophores.

Application to bright-colored chromatophores

Xanthophores and erythrophores are rather difficult objects to assess for their motile responses quantitatively, because their contrast against the lucent background in a transmission microscopic field is much smaller than that of melanophores. Particularly when responses of lightly colored xanthophores are measured, net changes of light transmittance are much smaller. A higher amplification in the electronic part is naturally required, and more precautions need to be taken during the measurement.

When brightly-colored chromatophores are mixed with the melanophores, it is practically impossible to measure their responses separately. On the other hand, when the melanophores are lacking, chromatophore responses can be measured rather easily. In such cases, trials to increase the contrast of cells against the brighter background are very useful. Until recently, we have been using a glass band-pass filter such as B-48S or V-44 (Toshiba Glass). The technique comprises the measurement with lightrays of the complementary color to the spectral absorption of chromatophores. More recently, we have switched to the use of a plastic band-pass filter produced by Fuji Photo Film for this purpose (Fig. 4C, F, H). For recording the responses of erythrophores, a filter with a spectral transmission peak of 500 nm (BPB-50) is appropriate, while one having a peak at 450 nm (BPB-45) is more suitable for xanthophores. In any case, the use of such filters inevitably lowers the intensity of light arriving at the photosensor, thus necessitating higher amplification of the signals.

As mentioned above, it is very difficult to assess the responses of brightly-colored chromatophores photoelectrically, if segments of melanophores are mingled within the microscopic field. In such cases, it is important to search for area of the skin where no melanophores are present. In many species of teleostean fish, such skin pieces can rather easily be prepared if one searches for a section where a yellowish or reddish tint dominates. Further, it is a very good idea to use brightly colored varieties of fish species in which melanophores

Downloaded From: https://bioone.org/journals/Zoological-Science on 16 Jul 2024
Terms of Use: https://bioone.org/terms-of-use

are genetically lost. The varieties of fish selected for our studies, namely, the orange-red variety of the medaka and red xiphophorine fish, have turned out to be very good materials for studying the physiological characteristics of xanthophores and erythrophores, respectively.

As an example of the application of this method to xanthophores, Figure 6 illustrates the recording of their responses of them on the scale of a medaka. Usually, the size of xanthophores is smaller than that of melanophores. By recording the transmittance through a circular area 150 μm in diameter therefore, the responses of several of them are commonly recorded. If one wants to record the response of a single xanthophore, an objective lens of higher magnification, e.g., 40X, or a field restricting aperture (FRA, Fig 1) of a smaller diameter can be employed. In the recording exhibited in Figure 6, a 40-X objective lens was used. First, xanthosome aggregation due to the increased K^+ concentration is seen. Then, the effect of BQ-788, a selective antagonist for endothelin-1, on xanthosome aggregation is exhibited. Finally xanthosome aggregation due to the effect of NE solution is displayed.

An example of the responses of several erythrophores in

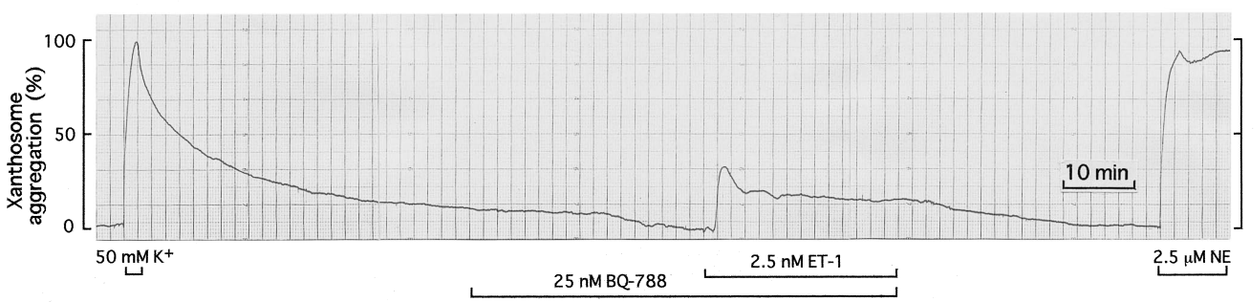

Fig. 6. A typical recording showing the responses of a few xanthophores in a scale from a medaka, *Oryzias latipes*, of the orange-red variety. In this particular recording, a band-pass filter with a spectral transmittance peak at 440 nm (V-44, Toshiba Glass) was employed for increasing the contrast of the images of the xanthophores against the background. The upward shift of the trace indicates an increase in light transmittance, namely the xanthosome-aggregating response of the cells. After equilibration in physiological saline, K^+-rich saline was applied to test the normal responsiveness of the cells. Following the treatment with a selective blocker for the mammalian ET_B receptor, BQ-788, mammalian ET-1 was applied. Finally, 2.5 μM norepinephrine (NE) solution was added to induce a maximal level of pigment aggregation.

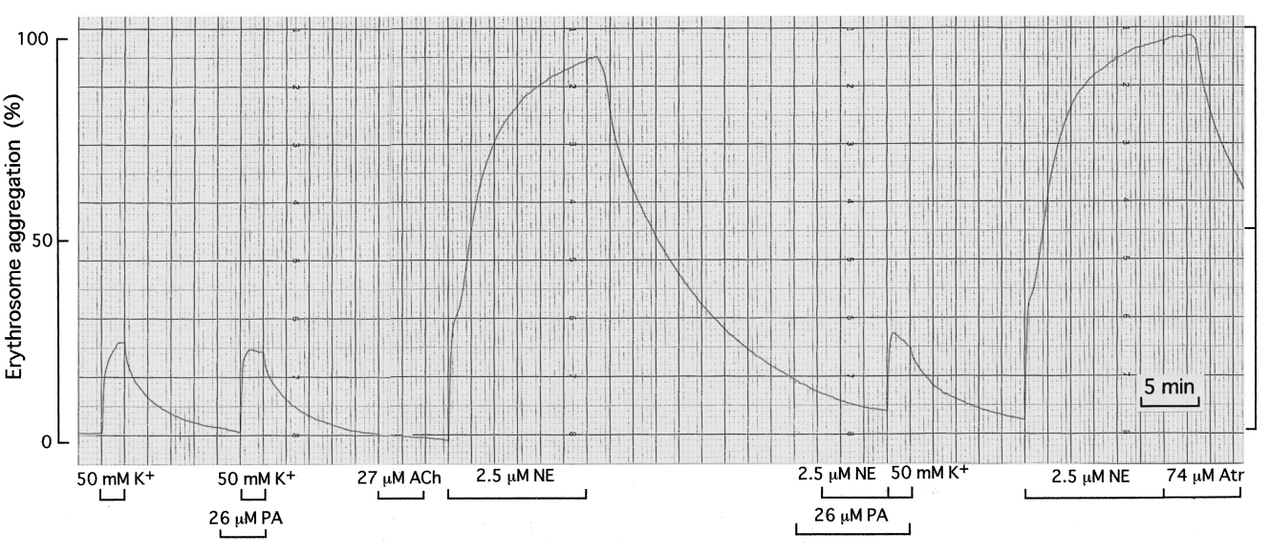

Fig. 7. A typical recording showing the responses of a few denervated erythrophores in a scale from a platyfish, *Xiphophorus maculatus*. In order to increase the contrast of the images of the erythrophores against the background, a band-pass filter with a spectral transmittance peak at 450 nm (BPB-45) was employed. The upward shift of the trace indicates an increase in the light transmittance, namely the erythrosome-aggregating response of the cells. After equilibration in physiological saline, the concentration of K^+ in the medium was increased to 50 mM. A moderate aggregation of erythrosomes took place. After equilibration again in physiological saline, the scale was treated with an α-adrenergic blocking agent, phentolamine (PA), for 2 min. Then, K^+-rich saline containing the same concentration of PA was applied. The erythrosome aggregation was not inhibited. Acetylcholine was found not to have any erythrosome-aggregating action. Norepinephrine (NE) was very effective in inducing a maximal level of pigment aggregation. After equilibration in physiological saline again, the action of NE was tested in the presence of PA. The action was totally blocked. The ineffectiveness of PA on reaction to an increased K^+ concentration was again confirmed. After the application of NE again, atropine (Atr) was applied, and it effectively dispersed the pigment. The details of these results and discussion relevant to this recording will be presented elsewhere.

Downloaded From: https://bioone.org/journals/Zoological-Science on 16 Jul 2024
Terms of Use: https://bioone.org/terms-of-use

a scale of a platyfish is shown in Figure 7. A K^+-rich saline moderately aggregated erythrosomes, but acetyolcholine (ACh) did not. By contast, NE strongly aggregated the pigment. An α-adrenergic blocker, phentolamine (PA), had no influence on the action of K^+ ions.

Application to cyanophores

Motile responses of blue chromatophores (cyanophores) found in some callionymid fish can rather easily be quantified by the photoelectric method, because the contrast of the cells against the background is fairly high (Goda and Fujii, 1995). The very same equipment used in the study of melanophores can be employed to record cyanophore responses, and Goda and Fujii (1995) actually recorded the responses of cyanophores and reported a recording. A red or an orange-to-red filter should be employed to eliminate the activities of xanthophores or erythrophores, such as when the melanophores are studied.

Application to leucophores

When we wanted to describe the responses of leucophores, we have conveniently employed an industrial microscope installed with dark-field epi-illumination optics (Fujii and Miyashita, 1979; Fujii *et al.*, 1997). However, such a microscope is rather infrequently found in biological laboratories. In this study, therefore, we decided to demonstrate that by employing an ordinary transmission light microscope, leucophore responses can be photoelectrically measured.

Through a transmission microscope, leucophores appear as dark cells like melanophores, and one may frequently mistake them for melanophores. This is because lightrays are strongly scattered away from the light path by the light-scattering organelles (leucosomes) within the cells. Leucophores are commonly found to be located concentrically just beneath melanophores, such as in the dermis of the killifish *Fundulus* (Menter *et al.*, 1979) and of the medaka *Oryzias* (Fujii and Miyashita, 1979; Obika, 1996). In such cases, it is practically impossible to measure leucophore responses selectively. Occasionally however, a leucophore can be found by itself, i.e. without an overlying melanophore and for transmission photometry, such a leucophore is perfectly .

Physiological studies of leucophores can be performed very efficiently using individuals of the orange-red variety of medaka, because interfering melanophores are lacking in their skin. In addition, they are more easily available commercially now than are wild-type specimens. Again, a red long-pass filter is very useful for measuring the motile responses of leucophores, because the influence of motile activities of xanthophores can be eliminated, as was demonstrated in Figure 4I when an orange-red filter (SC-54, Fuji Photo Film) was used. In the photoelectric recording displayed in Figure 8, a more reddish filter (SC-56, Fuji Photo Film) was used in order to record the responses of individual leucophores on scales more exactly. An elevation of the K^+ concentration in the perfusing medium gave rise to the dispersion of leucosomes, and NE exhibited the same effect.

Being different from the cases of other chromatophore species (cf. Figs. 5–7), leucosomes become aggregated when the skin preparation is equilibrated in physiological saline. Upon stimulation by an increase in K^+ concentration, NE, and so on, the leucosomes disperse. In the normal system mode that is commonly employed for recording the responses of other types of chromatophores, leucophore responses to these agents are recorded as downward shifts of the trace, as exhibited in Figure 8. Reversing the polarity of the electrical signals to the recorder allows the generation of recordings in which the leucosome dispersion results in an upward shift of the trace. In the electronic system presented here, we can easily

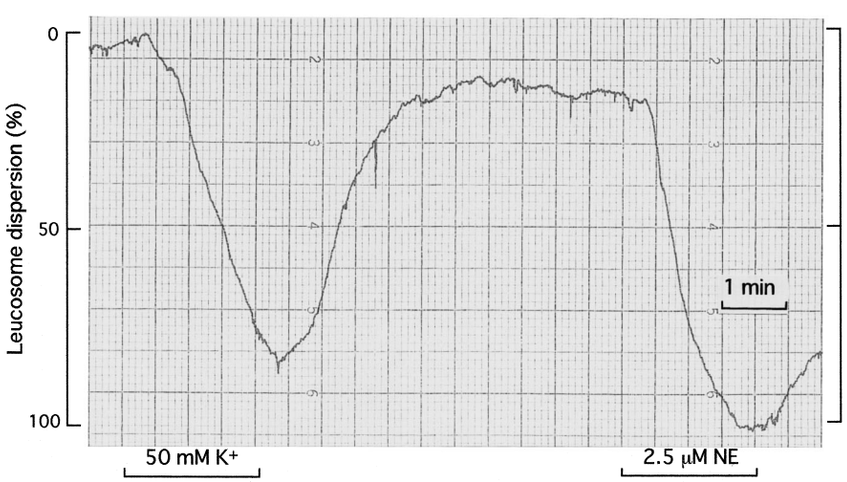

Fig. 8. A typical recording showing the responses of a single leucophore in a scale plucked from a medaka of the orange-red variety. In order to minimize influences of motile responses of xanthophores existing nearby, a red long-pass filter (SC-56) was employed. The normal mode for recording the responses of ordinary chromatophores was used. Thus, the downward shifts of the trace indicates the extent of leucosome dispersion. An increase in K^+ concentration and NE dispersed the leucosomes. Momentary downward shifts from the trace are due to decreases in light transmittance caused by small air bubbles that passed across the microscopic field being measured.

Downloaded From: https://bioone.org/journals/Zoological-Science on 16 Jul 2024
Terms of Use: https://bioone.org/terms-of-use

reverse the polarity of the signal just by turning the toggle switch (TS_1) in Part 2 of Figure 2. In such recordings, the responses of the cells can then be graduated as an upward transition of the trace.

Further quantification of responses

In recording the responses of dendritic chromatophores photoelectrically, the magnitude of response is usually expressed in terms of the percentage change recorded during a certain series of measurements. If one wants to describe the response by light transmittance or by absorbance, a neutral filter of relatively low density can conveniently be utilized.

In the final part of the recording shown in Figure 5 that exhibits the responses of a melanophore from a dark chub, for example, a sudden and brief downward deflection of the trace is seen during when melanosomes were completely aggregated by the application of 2.5 μM NE. This was due to the insertion of a neutral density filter with an absorbance of 0.2 (ND-0.2, Fuji Photo Film) for 15 sec across the light pathway, between the illuminator and the condenser lens of the microscope. When we take the maximal aggregation of pigment to be the null absorbance, or the unit transmittance therefore, the level attained equals 0.2 in absorbance, or 0.63 in transmittance. In this way, the magnitude of the response can be transformed into absorbance or into transmittance, as indicated on the righthand ordinate, for example.

When changes in the transmittance due to the motility of chromatophores are smaller, such as when the responses of xanthophores or of erythrophores are studied, a lighter neutral density filter may be appropriate. For example, we occasionally use an ND-0.1 filter (absorbance: 0.1, Fuji Photo Film) to measure the responses of *Oryzias* xanthophores and *Xiphophorus* erythrophores.

We have just indicated above that the responses of leucophores may be recorded by expressing the decrease in light transmittance as an upward shift of the pen. In such cases also, a neutral filter can be employed. After confirming the aggregation of leucosomes into the perikayon, a neural density filter is inserted across the light path. The resultant decrease in light transmittance causes an upward translocation of the trace.

In either case, i.e. when the insertion of a density filter causes a downward or an upward shift of the trace, the graduation of the ordinate can be calibrated into the transmittance or into the absorbance, whichever is preferred. In usual physiological or pharmacological analyses of responses, however, such a transformation of graduation on the ordinate is not an indispensable condition.

DISCUSSION

To date, several methods have been employed for describing the responses of chromatophores. Among them, the well known melanophore index (M.I., or MI) which was originally described for assessing the responses of amphibian melanophores (Hogben and Slome, 1931) has been frequently employed to describe the responses of chromatophores of many other groups of animals as well. However, that method has occasionally been criticized for its rather low quantitative nature. Direct microscopic measurement of the diameters of individual chromatophores or the lengths of cellular projections has sometimes been tried (e.g., Spaeth, 1916; Kinosita, 1963). However, since it employs an eyepiece micrometer, that procedure is rather troublesome. Photomicrography is the simplest way in a sense, and can provide visual records of higher quality. However, that method cannot follow rapid responses of chromatophores, and results must be presented with only a limited number of images. The microscopic images can be recorded on videotape (Fujii *et al.*, 1991), but this more convenient method still suffers from a lack of resolving power, and selection of images is naturally needed for presentation such as with photomicrography.

Meanwhile, the photometric method which measures transmittance through the skin has become a convenient method to characterize physiological responses of chromatophores. If compared with the above-mentioned methods, unfortunately the measurement of light intensity through a restricted area of a microscopic field naturally involves rather complicated procedures, which frequently leads to suboptimal application. With the intent of making this method more available to researchers in the field of pigment cell physiology therefore, we have kept mindful of simplifying the system, and have published improved methods at occasional stages of development (Fujii, 1959; Fujii and Novales, 1969; Fujii and Miyashita, 1975, 1979; Oshima and Fujii, 1984; Oshima *et al.*, 1984). In the present communication, we have now described the latest version of our system.

Some workers are still using photoconductive elements, represented by cadmium sulfide (CdS) cells, as the photosensors for the faint light through the microscope. However, we highly recommend the use of silicon photodiodes, the so-called “solar batteries”, which have high performance and which we have been using in recent years. Without the need for additional current which can complicate the electronics, the silicon photodiode itself generates photo-current in proportion to the amount of photons it receives. In addition, silicon photodiodes have similar or superior spectral sensitivity characteristics than do human eyes and many other animal species.

For accurate and stable conversion of the photo-current to voltage, integrated circuits of a new type, i.e. C-MOS-input, chopper-stabilized operational amplifiers, have now been introduced. Without requiring any additional electronic parts, these items can cancel the input offset by their built-in circuits. Consequently, very good linearity in the current-to-voltage conversion as well as in the voltage amplification is achieved which allows us to obtain very reliable results. In any case, the simplification and details of the electronic circuits should help novices to construct the equipment and wiring of all the stages. Actually, no adjustment of the apparatus is needed if correctly wired. When we have used conventional operational amplifiers without the built-in compensating com-

Downloaded From: https://bioone.org/journals/Zoological-Science on 16 Jul 2024
Terms of Use: https://bioone.org/terms-of-use

partment, the long-term drift of the offset has always been an annoying and inevitable problem. That defect has now been corrected, and the system can now be used without caring about the increasing offset.

Usually, chromatophores of several types co-exist in the skin. Even when the area of skin to be measured for light transmittance is restricted to a size as small as a single chromatophore, parts of other types of chromatophore are commonly found within the area of measurement. Unless precautions are taken to exclude the influence of the motile activities of other chromatophores, the responses of the targeted cell(s) are inaccurately recorded. As described in detail in this article, management of the spectrum of illuminating light using an appropriate color filter is simple but quite useful. Melanophores are easy objects for photometry, and their responses may be observed even without an additional color filter, although we recommend the use of an orange-red or a red sharp cut filter. By contrast, measurement of the responses of other types of chromatophores is a considerably more difficult task for the photometric method, and the use of a proper color filter is indispensable. In the present article, we have discussed their appropriate use, although only a few examples were presented. We know that the colors of chromatophores can vary subtly delicately, depending on the species, the location on the body, the dietary conditions, and so on. Thus workers should take special care to seek appropriate filters to be used in such instances.

Unless the investigation is specifically directed to a certain species of animal, experiments on melanophores can usually be performed without selecting a species of animals, because melanophores exist almost ubiquitously. In the case of other types of chromatophores, by contrast, selection of materials is fairly important, although we naturally work on defined species where the study is primarily concerned with that species. Fortunately, we can now obtain variously colored animals from pet shops and aquarists rather easily. Thus, we have successfully employed various beautifully colored aquarium species, either from inland waters or from coral reefs (cf. Fujii, 1993), which are of course wild types.

In some cases however, color mutants are convenient materials to study chromatophores. For example, the medaka or the Japanese killifish, *Oryzias latipes*, is a small freshwater teleostean species, which is widely employed in various fields of investigation. Scales excised from specimens of the wild type (gene symbol: *BR*) provide good material for the study of melanophores. Another mutant, called “blue” (*Br*), that lacks xanthophores may also be employed for such studies. By contrast, “orange-red” specimens (*bR*), which are now more readily available than wild ones are very convenient materials for studying xanthophores, because melanophores are missing in their skin. We have made good use of this mutant in our studies. In this “orange-red” variety, influences of motile responses of leucophores can also be avoided rather easily because the leucophores are only sporadically present. The “white” (*br*) specimens may also provide good material for investigating leucophores, because they lack both melanophores and xanthophores (cf. Yamamoto, 1975). Similarly, scales from the red skin of xiphophorine fish, e.g. platyfish and swordtails (Matsumoto, 1965), and the ventral skin of the neon tetra (Hayashi *et al.*, 1993) are good materials for the study of erythrophores, because other types of chromatophores are absent there. Such color mutants and skin specimens in which the targeted type of chromatophore is suitably distributed should provide useful materials for further studies on the physiology of chromatophores.

Employing equipment very similar to that described here, but using operational amplifiers of earlier types and glass color filters placed between the illuminator and the condenser lens, we had already performed studies on the physiology of melanophores of various species of fish (Fujii *et al.*, 1993; Hayashi and Fujii, 1993, 1994), and of erythrophores in the abdominal skin of the neon tetra (Hayashi *et al.*, 1993). Employing exactly the same apparati as those described in the present article, we have recently studied the motile responses to endothelins of xanthophores and erythrophores of some teleosts for the first time (Murata and Fujii, 1995). Working on the newly found blue chromatophores, termed cyanophores, of callionymid fish, we have also employed the same system (Goda and Fujii, 1995). Since then, we have been using the system describing here, and have enjoyed the much simplified operation and the increased stability. The usefulness of the present photometric method has now been assured, and we are able to record the motile responses of chromatophores of various types. The reliable results thus obtained will surely afford useful information for a deeper understanding of the physiology of pigmentary effector cells in general.

Optical and electronic parts employed for manufacturing this equipment can now be obtained at reasonable prices, and once constructed, they can be operated very easily. Thus, a similar photoelectric system may be adopted even in practical courses of animal physiology wherein undergraduates learn the physiology and pharmacology of chromatophores of various animals. We believe that the pigmentary effector system that exists in the skin of these animals provide an excellent approach for students to understand the mechanisms of cellular motility as well as those underlying the nervous and endocrine control of cells.

ACKNOWLEDGMENTS

We thank Dr. M. Sugimoto, Mr. N. Murata and Miss A. Masagaki for their interest and skilled assistance. This work was partly supported by grants to R.F. from the Ministry of Education, Science, Sports and Culture of Japan.

REFERENCES

Fujii R (1959) Mechanism of ionic action in the melanophore system of fish—I. Melanophore-concentrating action of potassium and some other ions. Annot Zool Japon 32: 47–59

Fujii R (1993) Cytophysiology of fish chromatophores. Int Rev Cytol 143: 191–255

Fujii R, Miyashita Y (1975) Receptor mechanisms in fish chromato-

Downloaded From: https://bioone.org/journals/Zoological-Science on 16 Jul 2024
Terms of Use: https://bioone.org/terms-of-use

phores—I. Alpha nature of adrenoceptors mediating melanosome aggregation in guppy melanophores. Comp Biochem Physiol 51C: 171–178

Fujii R, Miyashita Y (1979) Photoelectric recording of motile responses of fish leucophores. Annot Zool Japon 52: 87–94

Fujii R, Novales RR (1968) Tetrodotoxin: effects on fish and frog melanophores. Science 160: 1123–1124

Fujii R, Novales RR (1969) The nervous mechanism controlling pigment aggregation in *Fundulus* melanophores. Comp Biochem Physiol 29:109–124

Fujii R, Oshima, N. (1986) Control of chromatophore movements in teleost fishes. Zool Sci 3: 13–47

Fujii R, Wakatabi H, Oshima N (1991) Inositol 1,4,5-trisphosphate signals the motile response of fish chromatophores—I. Aggregation of pigment in the tilapia melanophore. J Exp Zool 259: 9–17

Fujii R, Tanaka Y, Hayashi H (1993) Endothelin-1 causes aggregation of pigment in teleostean melanophores. Zool Sci 10: 763–772

Fujii R, Yamada T, Fujita T, Oshima N (1997) An improved photoelectric method for recording motile responses of individual leucophores. Zool Sci 14: 549–558

Goda M, Fujii R (1995) Blue chromatophores in two species of callionymid fish. Zool Sci 12: 811–813

Hayashi H, Fujii R (1993) Muscarinic cholinoceptors that mediate pigment aggregation exist in melanophores of cyprinids (*Zacco* spp.). Pigment Cell Res 6: 37–44

Hayashi H, Fujii R (1994) Pharmacological profiles of the subtypes of muscarinic cholinoceptors that mediate aggregation of pigment in the melanophores of two species of catfish. Pigment Cell Res 7: 175–183

Hayashi H, Sugimoto M, Oshima N, Fujii R (1993) Circadian motile response of erythrophores in the red abdominal skin of tetra fishes and its possible significance in chromatic adaptation. Pigment Cell Res 6: 29–36

Hayashi H, Nakamura S, Fujii R (1996) The endothelin receptors that mediate aggregation of pigment in fish melanophores. Comp Biochem Physiol 115B: 143–152

Hogben LT, Slome D (1931) The pigmentary effector system VI. The dual character of endocrine coordination in amphibian colour change. Proc Roy Soc B 108: 10–53

Iga T, Matsuno A. (1980) Scale melanophores of *Zacco temmincki*: a preparation suitable for physiological or pharmacological studies on fish melanophores. Zool Mag (Tokyo) 89: 227–234

Iga T, Yamada K, Iwakiri M (1977) Adrenergic receptors mediating pigment dispersion in leucophores of a teleost, *Oryzias latipes*. Mem Fac Lit & Sci, Shimane Univ (Nat Sci) 11: 63–72

Kasukawa H, Sugimoto M, Oshima N, Fujii, R (1985) Control of chromatophore movements in dermal chromatic units of blue damselfish—I. The melanophore. Comp Biochem Physiol 81C: 253–257

Kasukawa H, Oshima N, Fujii R (1987) Mechanism of light reflection in blue damselfish iridophore. Zool Sci 4: 243–257

Kinosita H (1963) Electrophoretic theory of pigment migration within fish melanophore. Ann New York Acad Sci 100, Pt II: 992–1003

Matsumoto J (1965) Studies on fine structure and cytochemical properties of erythrophores in swordtail, *Xiphophorus helleri*, with special reference to their pigment granules (pterinosomes). J Cell Biol 27: 493–504

Menter DG, Obika M, Tchen TT, Taylor JD (1979) Leucophores and iridophores of *Fundulus heteroclitus*: biophysical and ultrastructural properties. J Morphol 160: 103–120

Murata N, Fujii R (1995) Subtypes of endothelin receptors in xanthophores and erythrophores of some teleosts. Zool Sci 12 (Suppl.): 122

Obika M (1976) An analysis of the mechanism of pigment migration in fish chromatophores. In “Pigment Cell Vol 3” Ed by V Riley, Karger, Basel, pp 254–265

Obika M (1996) Morphology of chromatophores of the medaka. Medaka 8: 21–27

Ödman S, Lundstrom I, Karlsson JOG, Sveider P, Svensson SPS (1992) Measurements of light transmission through single melanophores. Pigment Cell Res 5: 213–218

Oshima N, Fujii R (1984) A precision photoelectric method for recording chromatophore responses *in vitro*. Zool Sci 1: 545–552

Oshima N, Fujii R, Kasukawa H (1984) Simultaneous recording of motile responses of light-absorbing and reflecting chromatophores *in vitro*. Zool Sci 1: 711–717

Spaeth RA (1916) A device for recording the physiological responses of single melanophores. Am J Physiol 41: 597–602

Yamamoto T (1975) Medaka (Killifish): Biology and Strains. Keigaku Publ. Co., Tokyo, pp. 365.

(Received July 26, 1999 / Accepted August 17, 1999)

Downloaded From: https://bioone.org/journals/Zoological-Science on 16 Jul 2024
Terms of Use: https://bioone.org/terms-of-use